# DIESEL GENERATOR

## INSTRUCTION MANUAL

PLEASE READ BEFORE USE




GP12800DE

**Equipmart Ltd**
Kiam House
Birchill Road
Knowsley Ind. Park North
Merseyside
L33 7TD
United Kingdom

A REAL BEAST OF A MACHINE

T: (+44) 0151 548 5500
E: contact@equip2clean.co.uk

©Equipmart Ltd
www.equip2clean.co.uk

# TABLE OF CONTENTS


Important Safety Information ..... 3-5
Pre-Start Checks ..... 6-9
Operation ..... 9-10
Servicing & Maintenance ..... 10-12
Troubleshooting ..... 12-14
Electrical Diagram ..... 15
Technical Specifications ..... 16
Warranty ..... 17
Aftercare & Support ..... 18




© Equipmart Ltd

# IMPORTANT SAFETY INFORMATION

Proper storage, operation, and maintenance are essential for the safe, efficient, and reliable performance of your GP12800DE Open Frame Diesel Generator.

**Before operating or servicing the generator:**

Familiarise yourself with and strictly adhere to local laws and regulations. Carefully read and follow all safety warnings in this manual and on the unit.

Ensure all users, understand the safety precautions outlined in this manual before use.

While this manual provides extensive safety guidance, it is impossible to predict every potential hazard. If specific usage procedures, working methods, or operating techniques are not detailed, always prioritise personal safety. Additionally, ensure that all actions do not cause damage to the generator during operation.

# IMPORTANT SAFETY INFORMATION

**PLEASE READ THIS MANUAL CAREFULLY**
This manual contains essential safety information and operational guidelines for your generator. Proper use and maintenance will ensure safe and efficient performance while extending the lifespan of your equipment.

**IMPORTANT SAFETY NOTICE**
Before operating your generator, read and understand this manual. Failure to follow instructions may result in damage, reduced efficiency, or safety hazards. Always handle fuel, oil, and electrical connections with care.

**ENGINE OIL REQUIREMENTS**
For optimal operation, use CD-grade or higher diesel engine oil (CD15W-40) or an equivalent lubricant meeting SG-grade (SAE10W-40) standards. Using the correct oil ensures proper lubrication, reduces engine wear, and prevents damage.

**OIL CHANGE INTERVALS**
First Oil Change: Replace the oil after the first 50 hours of use.
Regular Oil Changes: Change the oil every 100 hours thereafter.
Skipping oil changes can lead to poor performance, increased fuel consumption, and engine damage. Dispose of used oil responsibly.

**ELECTRICAL CONNECTION GUIDELINES**
Do not connect the generator to a standard AC motor. Always ensure that any devices connected to the generator are within its rated output capacity to avoid damage.

**REFER TO THE FULL MANUAL**
This manual provides detailed instructions on:

- Safe operation and handling
- Routine maintenance
- Troubleshooting common issues
- Fuel storage and long-term care

By following these guidelines, you can keep your generator in excellent working condition. If you need further assistance, contact a qualified technician or authorised personnel.

# IMPORTANT SAFETY INFORMATION

## Operational safety

**1.** Only authorised personnel are permitted to carry out testing and maintenance.

**2.** Maintenance personnel must wear a face shield, rubber gloves, and protective clothing.

**3.** Do not touch the generator or any moving parts with wet or bare hands.

**4.** When the generator is in operation, keep your hands, hair, tools, and loose clothing away from rotating parts such as the crankshaft and rotor.

**5.** Do not inhale exhaust fumes.

**6.** Always stop the engine and allow it to cool before performing maintenance or refuelling.

**7.** Do not smoke or allow any open flames near the refuelling area.

**8.** Ensure the battery terminals are connected correctly.

**9.** Never overturn the battery.

**10.** Use appropriate equipment to lift or support the generator set and its components.

# PRE-START CHECK

**Operating Conditions**

**1. Outdoor Use**

- Place the generator on a dry, dust-free surface.
- Keep the generator out of direct sunlight and position it in a shaded, cool area.
- Ensure the generator is on a level surface to prevent movement.

**2. Indoor Use**

- Operate the generator in a well-ventilated area. Ensure exhaust fumes are directed outside the building and away from air intake points.
- Maintain a minimum clearance of 1.5 metres between the air intake, exhaust outlet, and any obstacles.
- Do not operate the generator in temperatures exceeding 40°C.
- Install the generator on a level surface.

**Preparation for Operation**

**3. Pre-start Checks**

- Inspect all components before starting the generator.
- Ensure the safety of the surrounding area and notify nearby personnel before starting.
- The generator contains rotating, high-temperature, and high-voltage components. Only inspect after shutting down the machine.
- If the warning light is illuminated, shut down the engine and inspect for abnormalities.
- Check for oil, fuel, or air leaks and listen for unusual sounds.

# PRE-START CHECK

- The generator contains high-speed rotating parts, which can be dangerous during operation.
- Keep doors closed and locked while the generator is running.
- Perform internal maintenance only after shutting down the machine.

**Pre-start Inspection Checklist**

Before starting the generator, carry out the following checks to ensure safe and efficient operation:

**1.** Check engine oil – Ensure the oil level is within the recommended range.

**2.** Check the fuel level – Ensure the fuel tank has sufficient fuel.

**3.** Inspect fuel lines – Check for any leaks, blockages, or damage.

**4.** Check the battery electrolyte – Ensure the electrolyte level is within the recommended range.

**5.** Verify grounding protection – Confirm that the generator is properly grounded.

**6.** Check for leaks – Inspect for any signs of oil or air leaks.

**7.** Ensure components are secure – Check that all bolts, fasteners, and parts are tightened.

**8.** Remove any foreign objects – Clear away any debris or obstructions inside or around the generator.

# PRE-START CHECKS

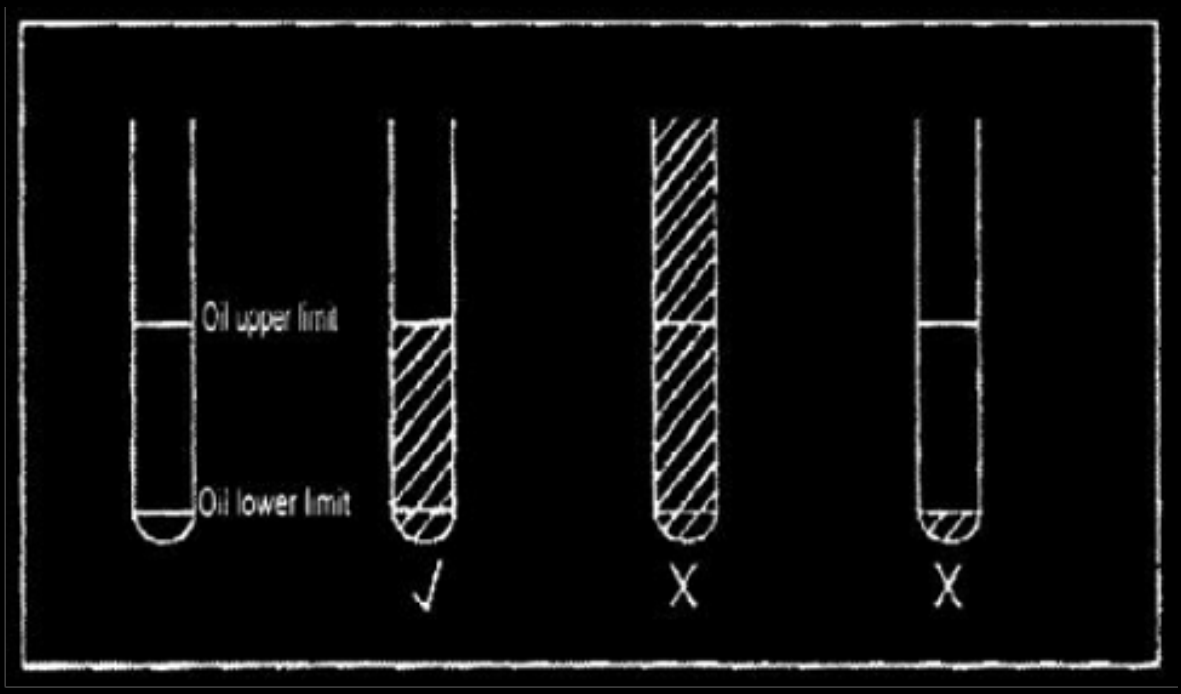


**Tips:** The engine oil will gradually be consumed during extended use. To avoid running out of oil while operating, always check the oil level before each use.

## Battery

- The battery electrolyte contains diluted sulphuric acid, which can be hazardous if handled incorrectly and may cause a fire.

- If the electrolyte comes into contact with skin, rinse thoroughly with plenty of water. If it gets into the eyes, rinse immediately with water and seek medical attention, as it may cause blindness.

- Remove the battery cap and check the fluid level. If the level is not between the upper and lower marks, add distilled water to reach the upper level.

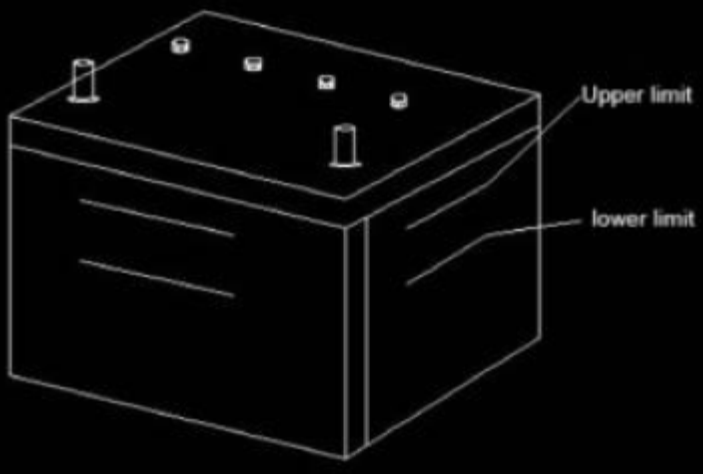

# PRE-START CHECKS

**1.** Check engine oil – Ensure the oil level is within the recommended range.

**2.** Check the fuel level – Ensure the fuel tank has sufficient fuel.

**3.** Inspect fuel lines – Check for any leaks, blockages, or damage.

**4.** Check the battery electrolyte – Ensure the electrolyte level is within the recommended range.

**5.** Verify grounding protection – Confirm that the generator is properly grounded.

**6.** Check for leaks – Inspect for any signs of oil or air leaks.

**7.** Ensure components are secure – Check that all bolts, fasteners, and parts are tightened.

**8.** Remove any foreign objects – Clear away any debris or obstructions inside or around the generator.

**9.** Electrical Connections - Verify that the electric motor's capacity matches the load and ensure all electrical connections are correct and secure.

# OPERATION

**Engine Start-up Procedure:**

**1.** Perform a daily inspection to ensure there is sufficient fuel.

**2.** Check that the oil level is within the specified range.

**3.** Turn the battery switch to the **ON** position.

**4.** Ensure the main switch is set to the **OFF** position.

**5.** Turn the engine's key switch to the **START** position.

# OPERATION

**6.** Allow the engine to preheat for approximately 3 to 5 minutes.

**Important:** The speed regulation screw has been pre-set before delivery and must not be adjusted by the user. Any adjustments may result in excessive or insufficient engine speed.

**Cold Weather Starting:**

**1.** Complete steps 1 to 3 above.

**2.** Turn the preheat switch to the ON position.

**3.** After 12 seconds, the indicator light will illuminate.

**4.** Turn the preheat switch OFF, then proceed with steps 4 to 6 above.

**Engine Shut-down Procedure:**

**1.** Turn the main switch to the **OFF** position.

**2.** Turn the engine key switch to the **STOP** position.

**3.** Switch off the battery switch.

# SERVICING & MAINTENANCE

## Maintenance schedule

◇ inspect and clean ○ replace

| | Items of maintenance | Daily inspection | 50 | 250 | 500 | 1000 |
|---|---|---|---|---|---|---|
| Engine | Check oil level and cleanness degree | ◇ | | | | |
| | Fuel inspection, waste | ◇ | | ◇ | | |
| | discharging | | | | | |
| | Inspection of battery electrolyte | ◇ | | | | |

# SERVICING & MAINTENANCE

| | | | | | | |
|---|---|---|---|---|---|---|
| | Check for gas or oil leakage | ◇ | | | | |
| | Check for slackness of all components | ◇ | | | | |
| | Check the color of exhaust | ◇ | | | | |
| | Inspect all instruments and warning lamps | ◇ | | | | |
| | Engine oil replacement | | ☆ Initial | ○ | | |
| | Oil filter replacement | | ☆ Initial | ○ | | |
| | Cleaning of air cleaner components | | | ◇ | | |
| | Check the specific weight of battery | | | ◇ | | |
| | Cleaning of cooling fin | | | | ◇ | |
| | Replacement of fuel strainer core | | | | ○ | |
| | Inside cleaning of fuel tank | | | | | ◇ |
| | Cleaning of air cleaner core | ◇ | | | | ◇ |
| | ※Check the space between engine valves | | | ☆ Initial | | ◇ |
| | ※Adjust the fuel nozzles | | | | | ◇ |
| | ※Check the spraying time of fuel | | | | | ◇ |
| | ※Check the shock proof rubber | | | | | ◇ |
| | Check nylon tube and rubber tube | | | | | ◇ |
| | Check the sound-absorbing material | | | | | ◇ |
| Generator | Check protective grounding | ◇ | | | | |
| | Measurement of insulation resistance | | | | | |
| | Check terminal and wiring of all circuit | | | ◇ | ◇ | |

For items with mark '◇', please consult the service department of our company.

The mark '☆Initial' refers to the initial inspection time. After that, inspect according to normal periods. The inspection time may vary according to engine specifications.

# SERVICING & MAINTENANCE

**Important Safety Precautions**

**Rotating Components:** High-speed rotating parts are hazardous. Always switch off the machine before carrying out maintenance.

**Electric Shock Risk:** High-voltage components can be dangerous. Ensure the machine is switched off before any maintenance.

**High-Temperature Parts:** Certain components remain extremely hot after shut-down. Allow the engine to fully cool before performing any work.

**Battery Safety:** Improper handling of the battery can lead to injury. Always disconnect the negative terminal before maintenance.

# TROUBLESHOOTING

| phenomenon | | cause | Countermeasures |
|---|---|---|---|
| The engine cannot be started | The starting motor is not rotating or rotates at very low speed. | Creepage or insufficient power of battery | Inspect oil level and specific weight |
| | | Loosened, cut-off or corrupted battery terminals | Do installation after cleaning |
| | | Bad grounding | Repair |
| | | Bad starting switch | Replace |
| | | Broken conductor | Replace |
| | | Bad starter | Repair |
| | The starter rotates, but the engine cannot be started. | No fuel | Fill fuel |
| | | The hole of fuel filter is blocked | Filter cleaning, replace |
| | | Bad air clean-up | Air clean-up |
| | Cold environment | Frozen fuel | Use light oil for winter, or fuel suitable for cold environment |
| | | Part of accumulated water in the fuel system is frozen | Heating, discharge the water in fuel tank, filter and fuel lines |
| | | Bad air clean-up of oil pipes | Air clean-up |

# TROUBLESHOOTING

| | | |
|---|---|---|
| The machine stops automatically, or the rotary speed doesn't increase. | The hole of fuel filter is blocked | Replace the filter components, clean or replace the filter |
| | Compressing leakage | Repair the engine |
| | Air cleaner is blocked | Replace air cleaner components |
| | Insufficient oil of engine | Inspect or replace oil transfer pump |
| The machine stops due to the drop of oil pressure | Bad oil pressure switch | Add engine oil |
| | Oil transfer pump doesn't work | Replace the switch |
| | The filter hole of engine is blocked | Replace the filter |
| Max. speed cannot be reached | Incorrect position of operation handle | Adjustment (turn up throttle) |
| | Air is mixed into fuel pipe | Air clean-up |
| The unloading speed is too high | Incorrect position of operation handle | Adjust the spacing bolt (turn down throttle) |
| The unloading speed is to low | Incorrect position of operation handle | Adjust the spacing bolt (turn up throttle) |
| | Air is mixed into fuel pipe | Air clean-up |
| Heavy vibration | Machine has not been fixed | Fastening |
| Noise — From engine | Noise | Repair |
| | Broken bearing | Replace |
| | The fastening bolt is loosen | Fastening |
| Noise — From engine cover | Noise | repair |
| Over heat | Surrounding conditions | Remove the substance around exhaust blower |
| | Dust on cooling fin | Clean the cooling fin |
| | The cooling air passage is blocked | Clean the cover of air intake |
| Incorrect voltage or no voltage | Bad volt meter | Replace the volt meter |
| | Bad AVR | Contact with service department |
| | Short circuit of loading | Troubleshooting |
| | Improper rotary speed of engine | Adjust rotary speed to rated one |
| | Wire breakage of rotor circuit | Repair |

# TROUBLESHOOTING

| | | |
|---|---|---|
| | Fire damage of engine circuit | Repair |
| Rated voltage cannot be obtained | Bad volt meter | Replace |
| | Bad ARV | Contact with service department |
| | Over loading | Decrease the loading to rated value |
| | The rotary speed of engine is too low | Adjust the throttle to rated one |
| | Fire damage of distribution of generator | Repair |
| | Low rotary speed | Increase the rotary speed |
| The voltage is too high | Bad volt meter | Replace |
| | Band AVR | Contact with service department |
| | Loosened AVR wiring | Plug the receptacle again |
| The voltage drops a lot when loading | The wire between generator and loading is too long or the wire loading area is too small | Adjust the installation position,shorten space,and thicken the diameter |
| | Bad ARV | Contact with service department |
| | Fire damage of main winding and coil | Replace the electric motor |
| | Unbalanced loading | Balance |

# ELECTRICAL DIAGRAM

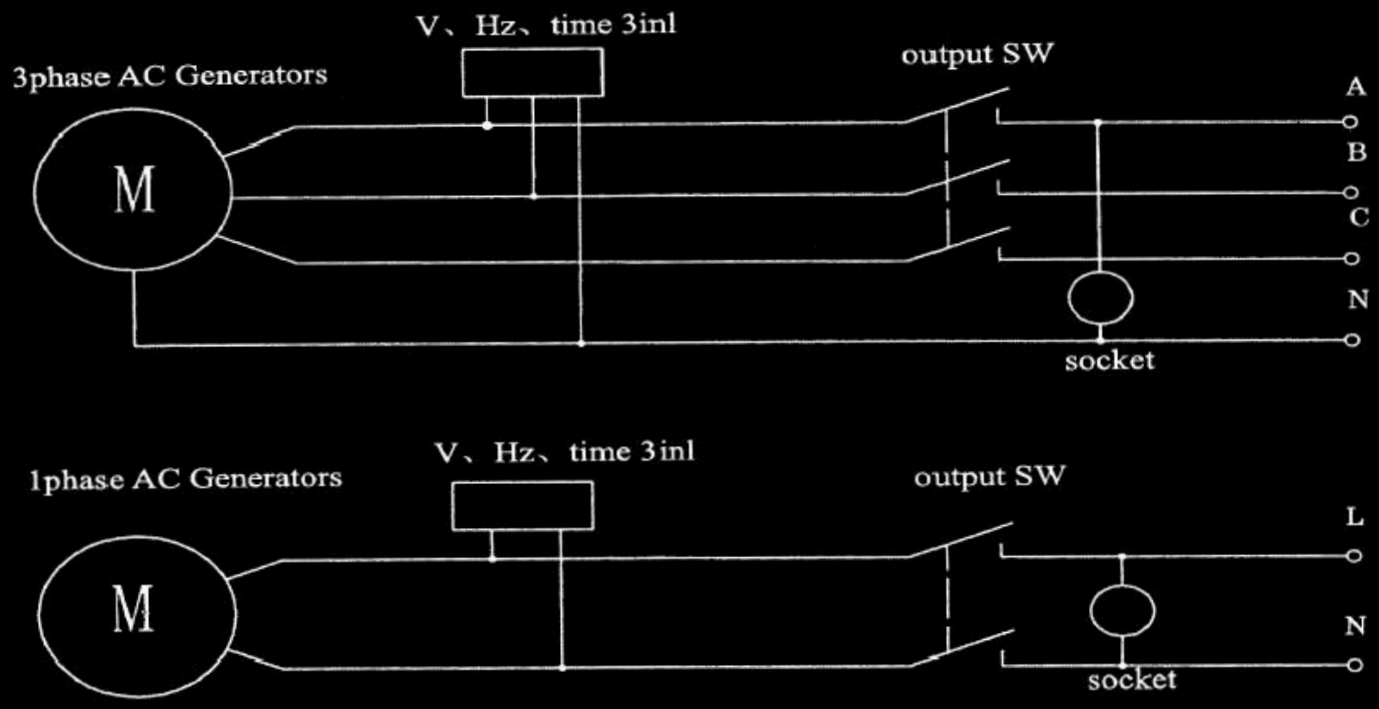

# TECHNICAL SPECIFICATION

## GP12800DE




## KEY FEATURES

**ATS CONNECTION**
Automatically switches between mains and generator power during outages, ensuring an uninterrupted power supply.

**KEY/ELECTRIC START**
Provides effortless ignition, added security, and easy operation, ideal for larger generators and frequent use.

**DIESEL POWERED**
Superior fuel efficiency, lower running costs, increased durability, higher torque, and safer fuel storage than petrol.

**LOW OIL SHUT OFF**
Protects the engine by automatically shutting off when oil levels are too low.

## TECHNICAL SPECIFICATION

| Model | GP12800DE |
|---|---|
| Maximum Watts | 12800w |
| Running Watts | 12000w |
| Fuel Type | Diesel |
| Weight (kg) | 170kg |
| Fuel Tank Capacity (litres) | 35L |
| Oil Capacity (litres) | 3.2L |
| Starting System | Key/Electric |
| Frequency | 50Hz |
| Dimensions (mm) | 850*565*620mm |

† Please ensure the correct model is referenced when reviewing technical specifications, as features & performance may vary between models.

## PANEL CONNECTIONS

**240V 16A SOCKET**
Suitable for standard heavy-duty equipment, providing reliable power for commercial and site use.

**240V 32A SOCKET**
Delivers higher power output for demanding machinery and larger tools, ensuring stable performance under heavy loads.

**120V 16A SOCKET**
Designed for site-safe applications, offering lower voltage for compliance with safety regulations while powering industrial equipment.

**120V 32A SOCKET**
Handles higher-powered 120V equipment, offering increased capacity for sites using lower-voltage tools.

equip2clean®
A proud subsidiary of equipmart

# WARRANTY




**Commercial and Industrial**
12 Months Limited*




**Domestic and Residential**
3 Years Limited*

We stand behind the quality and reliability of our generators, ensuring you have a dependable solution for your power needs.

**Comprehensive Coverage:** Our warranty protects you against any manufacturing defects, providing full support for repairs or replacements.

**Reliable Performance:** Our generators offer consistent, high-quality power, backed by our trusted warranty.

**Customer Support:** Should any issues arise, our dedicated customer service team is always on hand and ready to help with hassle-free assistance to offer solutions. Customers need to show proof of purchase when claiming warranty.

**Warranty Exclusions:**
Normal wear and tear and user misuse.
Any modifications made to the generator will void the warranty.
Cosmetic defects.
Fuel system damage or engine performance problems resulting from contaminated fuel due to poor storage.
Damage by accident, impact, improper installation, or storage.
Damage by water ingestion, submersion, and external water damage.
Damage caused by frost or overheating from excessive ambient temperatures or lack of ventilation.
Damage from overloading or underloading.
Fuel-related problems (contaminated or stale fuel, incorrect fuel/oil mixture, incorrect fuel type).
Please bear in mind, warranties are not transferable.

If the product develops a fault within 30 days, we will either repair the product, replace it with a like-for-like product, or offer a refund. If we replace the product, please allow us 14 working days to inspect the original product. If there is no fault found, the original will be returned, and the carriage will be chargeable.

# AFTERCARE & SUPPORT

Thank you for choosing the GP12800DE Diesel Generator, brought to you by equip2Clean®.

If you have any questions, need support, or encounter any issues with your product, our team is here to help.


**Equipmart Ltd**

Kiam House

Birchill Road

Knowsley Ind. Park North

Merseyside

L33 7TD

United Kingdom

(+44) 0151 548 5500

contact@equip2clean.co.uk

www.equip2clean.co.uk




**Equipmart Ltd**
Kiam House
Birchill Road
Knowsley Ind. Park North
Merseyside
L33 7TD
United Kingdom

T: (+44) 0151 548 5500
E: contact@equip2clean.co.uk

© Equipmart Ltd
www.equip2clean.co.uk