User and Installation Instructions

SmartVent Range of Extraction Canopies

SV1212, SV1216, SV1220 & SV1224 – LH/LV/CH/CV/RH/RV

Please make a note of your product details for future use:

Date Purchased: _____

Model Number: _____

Serial Number: _____

Dealer: _____

_____

IS554 ECN5023

Please read the following carefully before using this appliance.

Warnings and Precautions

Please ensure that all commissioning checks and initial start-up procedures have taken place.

This manual should be kept in a safe and accessible place for future reference.

This appliance is designed for professional use and must only be operated by qualified personnel.

Please ensure that the appliance is serviced regularly by a suitably qualified engineer.

It is mandatory that all appliances are installed, commissioned and serviced by a qualified and competent person as defined by the regulations in force in the country of installation (see below). Failure to comply will invalidate the warranty.

- **Health and Safety at Work Acts**
- **IEE regulations**
- **BS Codes of Practice**
- **Local and National Building Regulations**
- **Fire Precautions Act 1971**
- **DW172**
- **BS6173: 2009**

WARNING

- **Competent personnel familiar with the assessment of hazards and risks associated with industrial ventilation equipment such as fans and air handling units should install this product.**
- **Use lifting equipment which has a suitable safe working load for the SmartVent being lifted.**
- **Ensure steps, podium steps, scissor lift or mobile scaffold tower are secure and stable before use.**
- **Make sure the SmartVent is fully secure before removing the support stands.**
- **Disconnect the unit from the electricity supply before servicing or undertaking any electrical maintenance.**
- **Parts of this unit may become hot in normal use; suitable precautions must be taken to avoid accidental contact.**
- **A means of disconnection must be incorporated in the fixed wiring having a contact separation of at least 3.0mm in all poles.**
- **A gas interlock (supplied by others) conforming to functions described in CAIS23 and TB140 must be installed if the SmartVent is to be used over gas appliances.**
- **Connection to the premises electrical circuit is via two separate supplies.**

SECTION 1 - TECHNICAL DATA

Description	SMARTVENT
Product Code	**SV1212/16/20/24**
Height of Hood (mm)	700
Width (mm)	1200, 1600, 200 & 2400
Depth (mm)	1200
Weight (Kg)	63·5, 77·2, 91, 104·6
Voltage	1 ph 230VNAC
Motor Impeller (rpm)	905
Motor Max Flow Rate (m^3/hr)	2160
Motor Starting Current (A)	5
Motor Max. Current (A)	2·33
Light Circuit (A)	1

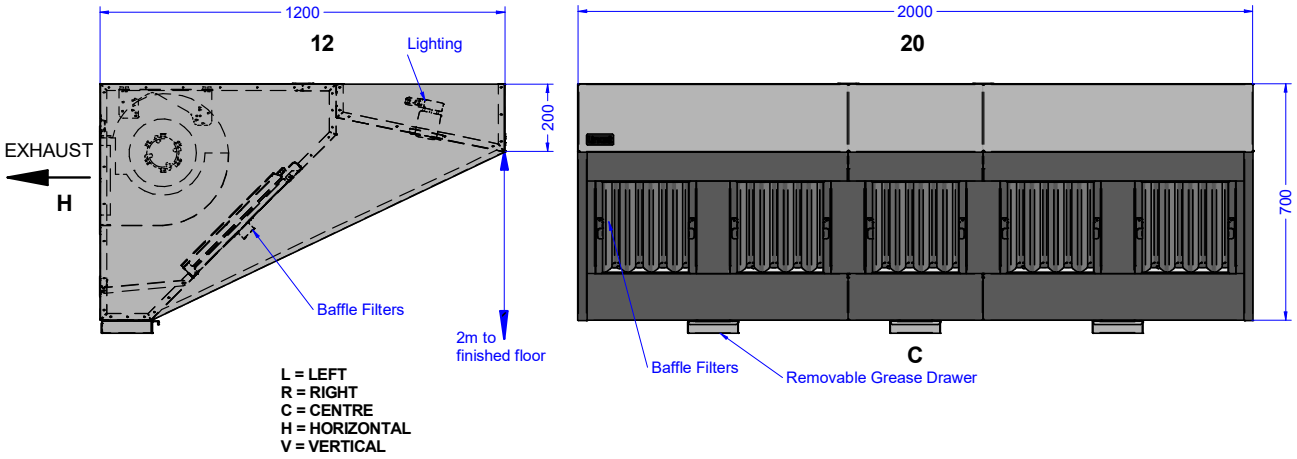

Note: the exhaust may exit at the left, centre or right and either horizontally or vertically, depending on the model purchased.

SECTION 2 – INSTALLATION

2.1. PREPARATION

Remove all packaging prior to installation. Remove all protective coating from locating contact surfaces.

2.2. SITING

The appliance must be installed in accordance with the appropriate regulations listed prior.

The appliance should be installed level at a height of 2m off the finished floor from the lower front leading edge.

2.3.1 MOUNTING – CENTRALLY MOUNTED FANS

Identify a suitable location with access to outside, for horizontal or vertical extraction.
Ensure the wall identified is of a suitable structure to support the Smartvent.
Remove the baffle filters. This will reveal the mounting braces on the interior back panel of the Smartvent.
Four mounting holes for M8 are provided, but additional fixings may be required, dependent on wall/partition structure.

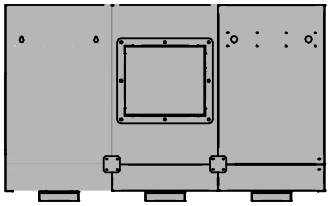

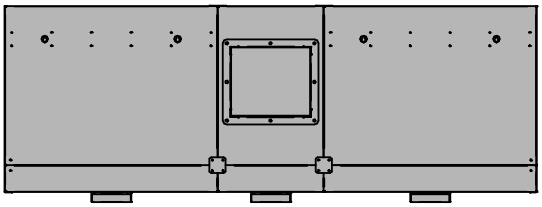

Long duct runs (ground floor to second storey roof, for example) may need a second duct-mounted motor.

2.5. ELECTRICAL SUPPLY AND CONNECTION

Connection of two electrical supplies is required. Necessary cable entries will be made by the installer. The lights are supplied connected in parallel. A connection to the premises lighting circuit will be required by simple connection into one of the end downlighting LED lamps. Note the L, N and E connections are clearly marked.

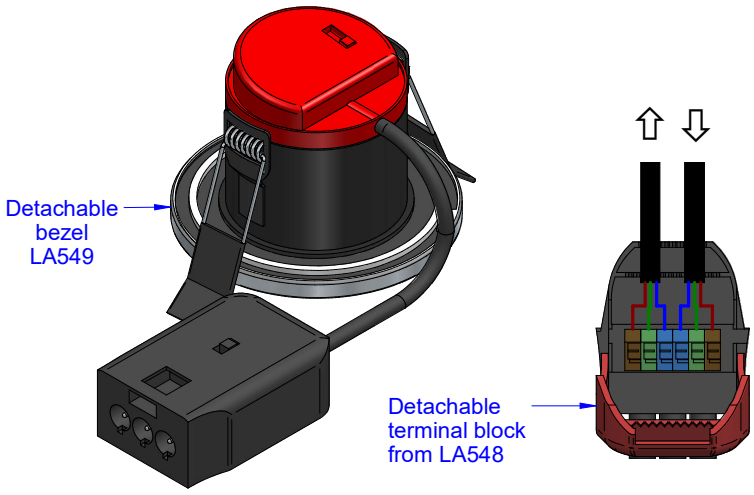

The motor should be connected by a qualified electrician to the speed controller provided (SC18). The motor has an L and N feed to the terminal block and an earth to the motor body casting.

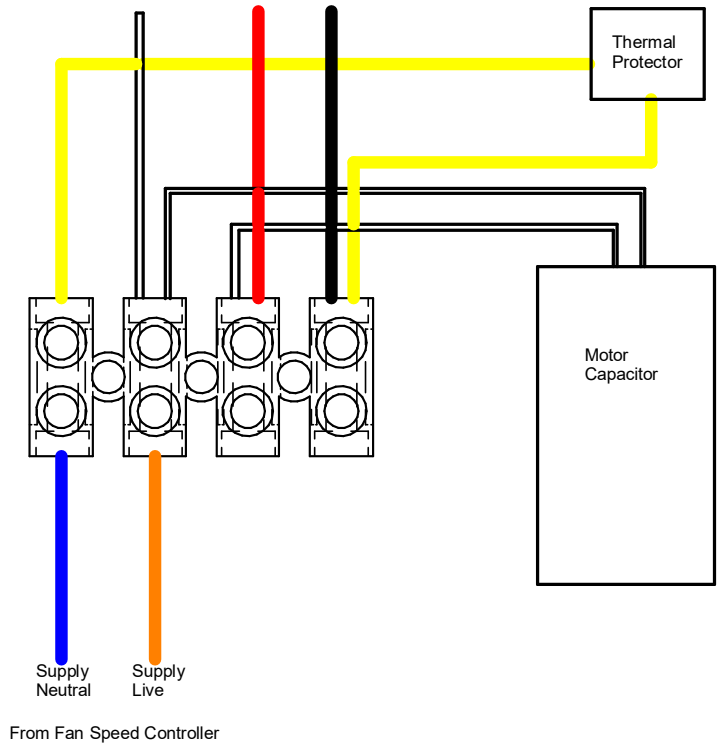

2.6. COMMISSIONING

2.6.1. OPERATION

Turn on the power supply at the fan speed control. Run the fan through the range of the controller. If operating over gas appliances, test for the lowest fan setting prior to interlock activation.
Check the lights by operating the relevant light switch. These are not dimmable lights. Do not connect to a dimmer switch.

2.6.2. SHUTTING DOWN THE APPLIANCE

Turn off the Smartvent at the fan speed controller and light switch. This will also trip the interlock (if a gas installation) if the gas supply has not already been isolated.

Ensure that the person responsible understands how to safely operate, clean and shutdown the appliance.

Note: This manual must be kept in a safe and accessible place for future reference.

SECTION 3 – USER INSTRUCTIONS

3.1. PREPARATION

Before using the appliance for the first time, ensure all protective plastic has been removed and baffle filters are in place.

3.2.1. OPERATION

Switch on the fan speed controller and energise the gas interlock. You are now ready to operate. Ensure the installer has advised you the lowest setting to safely operate the SmartVent without nuisance activation of the gas interlock.

3.2.2. SHUTTING DOWN THE APPLIANCE

Turn off the SmartVent at the fan speed controller and light switch. This will also trip the interlock (if a gas installation).

Warning: After operation, some parts of the appliance may remain hot for a period of time if above appliance flues. Please take care to avoid accidental burns.

3.3. CLEANING

Ensure the unit is isolated from the mains supply before commencing cleaning.
Disconnect appliances under the SmartVent where possible and move away for ease of access.
Remove the baffle filters and clean separately with a mild detergent and water.
Remove the grease drawers, empty and clean separately with a mild detergent and water.
Wipe off any food vapour residue on the interior face of the SmartVent and wash down with a mild detergent and water. Rinse to ensure that all traces of detergent have been removed.

Do not use abrasive cleaners or any containing chlorine.
Do not use a water jet to clean the appliance.

SECTION 4 – COMPONENT REPLACEMENT

4.1. LIGHT REPLACEMENT

1. Disconnect the mains supply.
2. Pull the lamp away from the hood by gripping the edge of the bezel.
3. When the spring becomes exposed, push it back against the lamp body to allow it to come through the hole in the hood.
4. Unclip the terminal block from the failed lamp and clip the new one in place (the one supplied with the replacement is surplus to requirements).
5. Twist the bezel to release it and re-fit to the new lamp.
6. Fold up the springs against the body of the lamp and slot back through the hole in the hood.

4.2. MOTOR REPLACEMENT

1. Isolate the power supply at the fan speed controller or the distribution board.
2. Remove the baffle filters necessary to access the motor. This is achieved by sliding the filter up a short distance (no more than 20mm) and swinging out from the base.
3. Either one or two of the filter infills will need to be removed. The necessary infills are screwed in (the remainder are riveted and not intended to be removed). If the infill appears down the centre of the motor, check the upper and lower edges for the fixing screws and remove with a T15 Torx driver. If two infills overlap the motor at each end, these will be removable by the same procedure.
4. Disconnect the motor supply connection (see page 5).
5. Mark each motor support bracket screw mounting hole, for future reference when re-mounting the motor.
6. Remove the two self-tapping screws holding the motor to each support bracket and carefully withdraw the motor from the SmartVent.
7. Fit the motor by reversal of the above procedure ensuring the motor is relocated correctly inside the exhaust flange.

4.3. REPLACEMENT COMPONENT LIST

PART NUMBER	DESCRIPTION
FA126	0·12kW Centrifugal Fan
FI40	Baffle Filter
LA363	7W LED Downlight Lamp
LA364	Replacement Bezel for Lamp
SC18	Fan Speed Controller

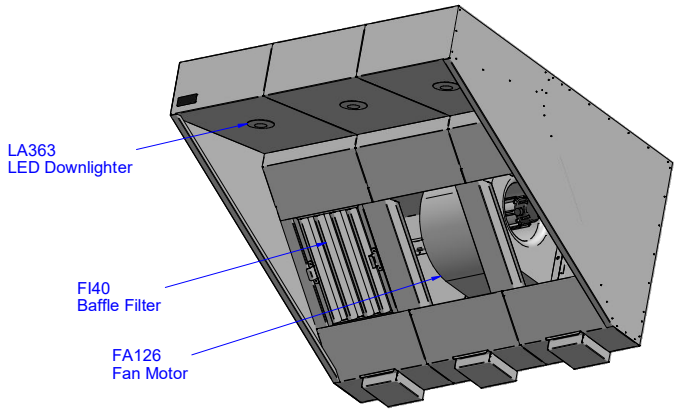

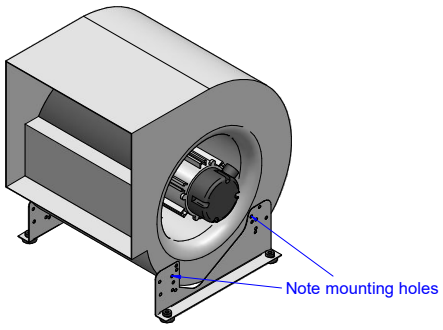

SERVICE INFORMATION

For help with the installation, maintenance and use of your **Lincat** equipment, please contact our service department:

☎ UK: 01522 875520

For non-UK customers, please contact your local dealer.

All service work, other than routine cleaning should be carried out by one of our authorised service agents. We cannot accept responsibility for work carried out by other persons.

To ensure your service enquiry is handled as efficiently as possible, please tell us:

- Brief details of the problem
- Product code
- Type number
- Serial number

} All available on serial plate

Lincat reserve the right to carry out any work under warranty, given reasonable access to the appliance, during normal working hours, Monday to Friday, 08:30 to 17:00.

GUARANTEE

This unit carries a comprehensive UK mainland 2 year warranty. The guarantee is in addition to, and does not diminish your statutory or legal rights.

The guarantee does not cover:

- Accidental damage, misuse or use not in accordance with the manufacturer's instructions
- Consumable items
- Damage due to incorrect installation, modification, unauthorised service work or damage due to scale, food debris build-up, etc.

The manufacturer disclaims any liability for incidental, or consequential damages.
Attendance is based on reasonable access to the appliance to allow the authorised technician to carry out the warranty work.
Service calls to equipment under warranty will be carried out in accordance with the conditions of sale. Unless otherwise specified, a maximum of 15 minutes of administrative time, not spent directly carrying out servicing work, is provided for within the warranty. Any requirement for staff attending the call to spend greater time than 15 minutes due to administrative requirements, such as on health and safety risk assessments, will be chargeable at the prevailing rate.