INSTALLATION GUIDE AND USERS MANUAL



Professional Under Cabinet Range Hood

Model Name: **AP238-PS15**

Available Sizes: 36”, 42”, 48”, 60”

infernus

CE

Rev.20230223

TABLE OF CONTENTS

Important Safety Notice..... 3
Calculating Duct System Length..... 5
Specifications..... 5
Required Tools..... 6
Parts Supplied..... 6
Dimensions..... 7
Preparation..... 9
Installation 10
Grease Tunnel and Filters..... 13
Venting Methods..... 14
Wiring Diagram..... 16
Range Hood Operations..... 17
Troubleshooting..... 19
Do’s and Don’ts for Duct Venting..... 20
Bulb Replacement..... 20
Maintenance..... 21
Warranty..... 22
Disclaimer..... 23
Contact Us..... 23

IMPORTANT SAFETY NOTICE

Read all instructions before installing and operating this appliance

- The installation in this manual is intended for qualified installers, service technicians or persons with similar qualified background. Installation and electrical wiring must be done by qualified professionals and in accordance with all applicable codes and standards, including fire-rated construction.
- DO NOT attempt to install this appliance yourself. Injury could result from installing the unit due to lack of appropriate electrical and technical background.
- Range hood may have very sharp edges; please wear protective gloves if it is necessary to remove any parts for installing, cleaning or servicing.
- Activating any switch ON before completing installation may cause ignition or an explosion.
- Due to the size and weight of this range hood, two-person installation is recommended.

To reduce the risk of fire, electric shock, or injury to persons:

- For general ductilating use only. DO NOT use to exhaust hazardous or explosive materials and vapors.
- The combustion air flow needed for safe operation of fuel-burning equipment may be affected by this unit's operation. Follow the heating equipment manufacturer's guideline and safety standards such as those published by the National Fire Protection Association (NFPA), and the American Society of Heating, Refrigeration and Air Conditioning Engineers (ASHRAE), and the local code authorities.
- Before servicing or cleaning unit, switch power OFF at service panel and lock service panel to preduct power from being switched ON accidentally.
- Clean grease laden surfaces frequently. To reduce the risk of fire and to disperse air properly, make sure to duct air outside. DO NOT duct exhaust into spaces between walls, crawl spaces, ceiling, attics and/or garages.
- Ducted fans MUST always be ducted to the outdoors.
- Use only metal ductwork and this unit MUST be grounded.
- Sufficient air is needed for proper combustion and exhausting of gases through the duct to preduct back drafting.
- When cutting or drilling into wall or ceiling, be careful not to damage electrical wiring or other hidden utilities.
- All electrical wiring must be properly installed, insulated and grounded.
- Old duct work should be cleaned or replaced if necessary to avoid the possibility of a grease fire.
- Check all joints on duct work to insure proper connection and all joints should be properly taped.
- Use this unit only in the manner intended by the manufacturer. If you have questions, contact the vendor.

To reduce the risk of a stove top grease fire:

- Keep all fans, spacers, filters, grease tunnels, oil containers and grease-laden surfaces clean. Grease should not be allowed to accumulate on fan, baffle, spaces, filter, grease tunnel and oil container.
- Always turn range hood ON when cooking at high heat or when cooking foods that produce flames.
- Use high settings on cooking range only when necessary.
- Never leave surface units unattended at high settings. Boil overs cause smoking and greasy spillovers that may ignite. Heat oils slowly on low or medium settings.

IMPORTANT SAFETY NOTICE

Read all instructions before installing and operating this appliance

- Clean ductilating fan frequently.
- Always use appropriate cookware and utensils size.
- Always use cookware appropriate for the size of the surface element.

To reduce the risk of injury to persons in the educt of a stove top grease fire:

- Smother flames with a close-fitting lid, cookie sheet, or metal tray, then turn OFF the burner. Be careful to PREDuct BURNS. Never pick up a pan that has flames—you may be burned. Keep flammable and/or combustible material away from flames. If the flames DO NOT go out immediately, EVACUATE and CALL the FIRE DEPARTMENT or dial your local emergency service immediately.
- DO NOT use WATER, including wet dishcloths or towels — it will result in a violent steam explosion
- Use an extinguisher ONLY if:
  - You know you have a Class A, B, C extinguisher, and you already know how to operate it.
  - The fire is small and contained in the area where it has started.
  - The fire department is on the way.
  - You can fight the fire while having access to a safe exit.

To reduce the risk of injury to persons in the educt of a gas leaks:

- Extinguish any open flame.
- DO NOT turn on the range hood fan or any type of ductilator.
- DO NOT turn on the lights or any type of appliance.
- Open all doors and windows to disperse the gas. If you still smell gas, call the gas company and fire department or dial your local emergency service immediately.

Your safety and the safety of others is very important. We have provided many important safety messages in this manual and on your appliance. Always read and obey all safety messages. All safety messages will tell you what the potential hazard is, tell you how to reduce the chance of injury, and tell you what can happen if the instructions are not followed.



This is the safety alert symbol. This symbol alerts you to potential hazards that can hurt you and others. All safety messages will follow the safety alert symbol and the word “WARNING”.

The manufacturer and/or distributor/reseller declines all responsibility in the educt of failure to observe the instructions given here for installation, maintenance and suitable use of the product.

The manufacturer and/or distributor/reseller further declines all responsibility for injury due to negligence and the warranty of the unit automatically expires due to improper maintenance.

The manufacturer and/or distributor/reseller will not be held responsible for any damages to personal property or real estate or any bodily injuries whether caused directly or indirectly by the range hood.

CALCULATING DUCT SYSTEM LENGTH

To calculate the length of the duct system you require, subtract the equivalent feet for each “Duct piece” (Table Below) used in the system from the “Recommended maximum run” (Table Below). The longest duct run that is acceptable (if completely straight) is 50 feet. The number of duct pieces (elbow, transition, etc.) installed in your duct run will determine the maximum length the duct run can be. Please refer to the example below:

Duct Run Calculation:	
Recommended maximum run	
8” round duct	50 ft
Duct piece deduction	
Each 90º elbow used	9 ft
Each 45º elbow used	5 ft
Each round to rectangle transition used	7 ft
Side wall cap with damper	7 ft
Roof cap	7 ft

Duct Run Calcuation example:

One roof cap, two 90º elbows, and one 45º elbow used:

7ft + 9ft + 9ft + 5ft = 30ft used.

The above duct pieces used are equivalent to 30ft of a straight duct run. Subtract 30ft from the allowable 50ft. The remaining distance of 20ft is the longest that the straight ducting (in addition to the vent pieces) can be.

SPECIFICATIONS*

Body	Seamless Stainless Steel, Brushed Finish
Power Rating	220V/50Hz
General Input Power	240W + # of Light x 3W
Motor Input Power	240W (120W +120W)
Motor Revolution	800 RPM (±10%) to 1300 RPM (±10%)
Levels Of Speed Control	4 Levels
Maximum Airflow	1000 CFM
Noise Level (Q/L/M/H)	1.5 Sone(46dB) / 3.5 Sone(58dB) / 5.3 Sone(64dB) / 7.5 Sone (69dB)
Motor Type	Double Motor
Control Type	Touch Control
Filtration Type	Stainless Steel Baffle Filters
Illumination	3W LED
Venting Size	Top, 8 inches Round

** Subject to change without notice, please contact Infernus Range Hoods for details.*

REQUIRED TOOLS

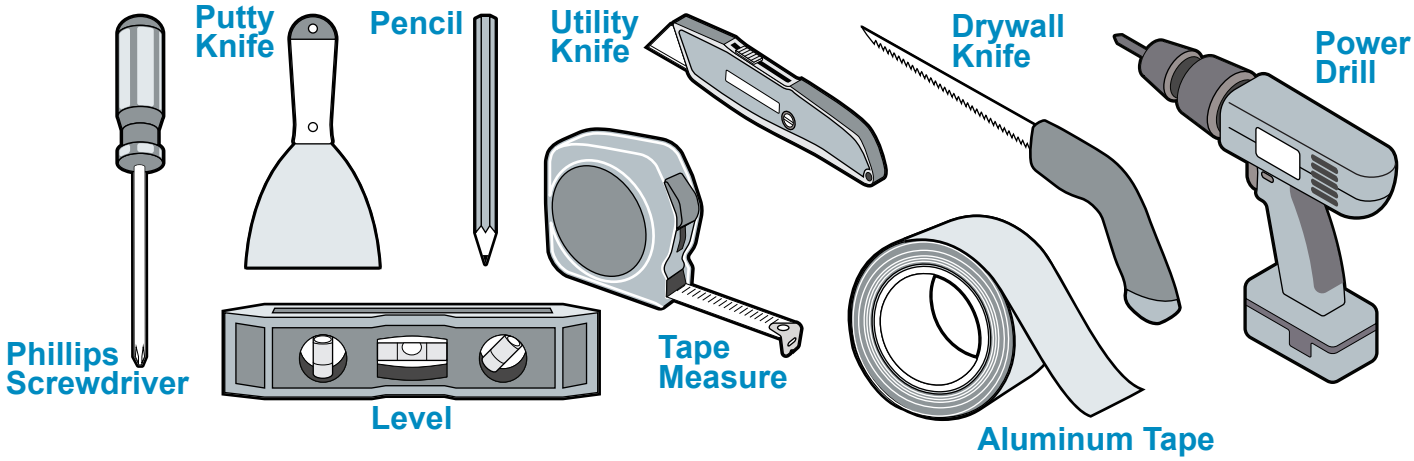

PARTS SUPPLIED

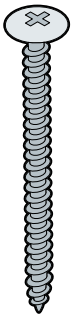

Anchor Screw
6pcs

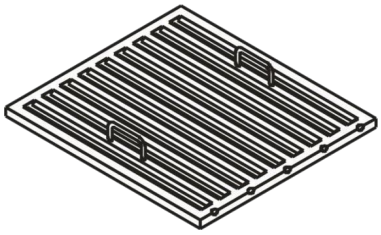

Filters

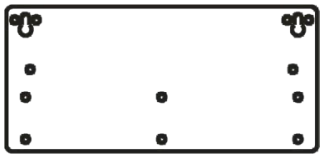

Hood-mounting bracket

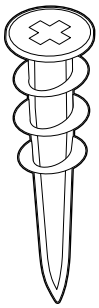

Self-Drilling Plastic Drywall Anchor
6pcs

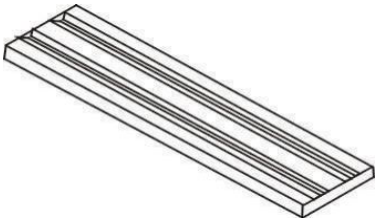

Filters spacer



Flat Screw
6pcs

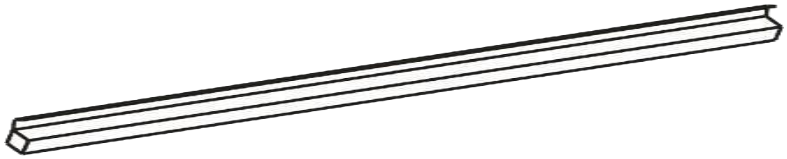

Grease tunnel

NOTE:
Where necessary, additional screws will be needed for installation and added support, but is not included. Please review contents before installation.

DIMENSIONS (Continued)

AP238-PS15-36

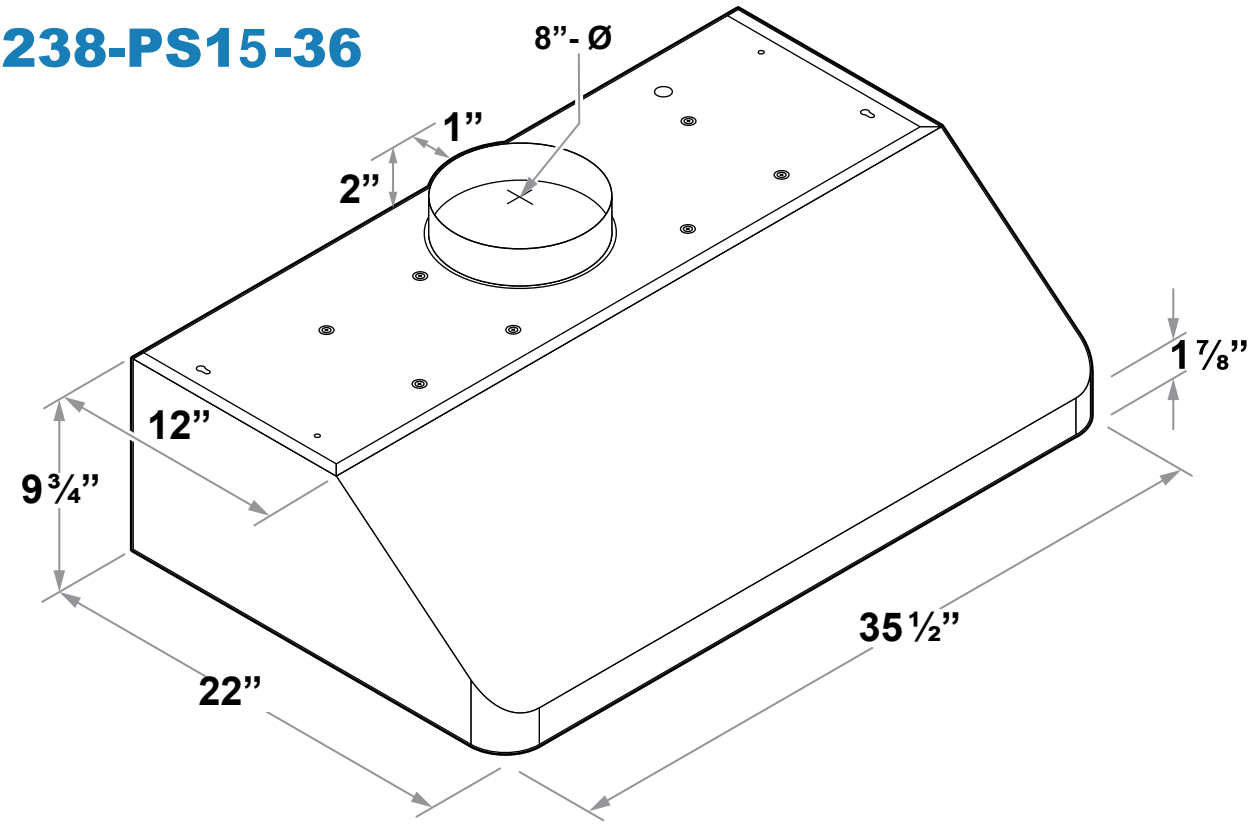

AP238-PS15-42

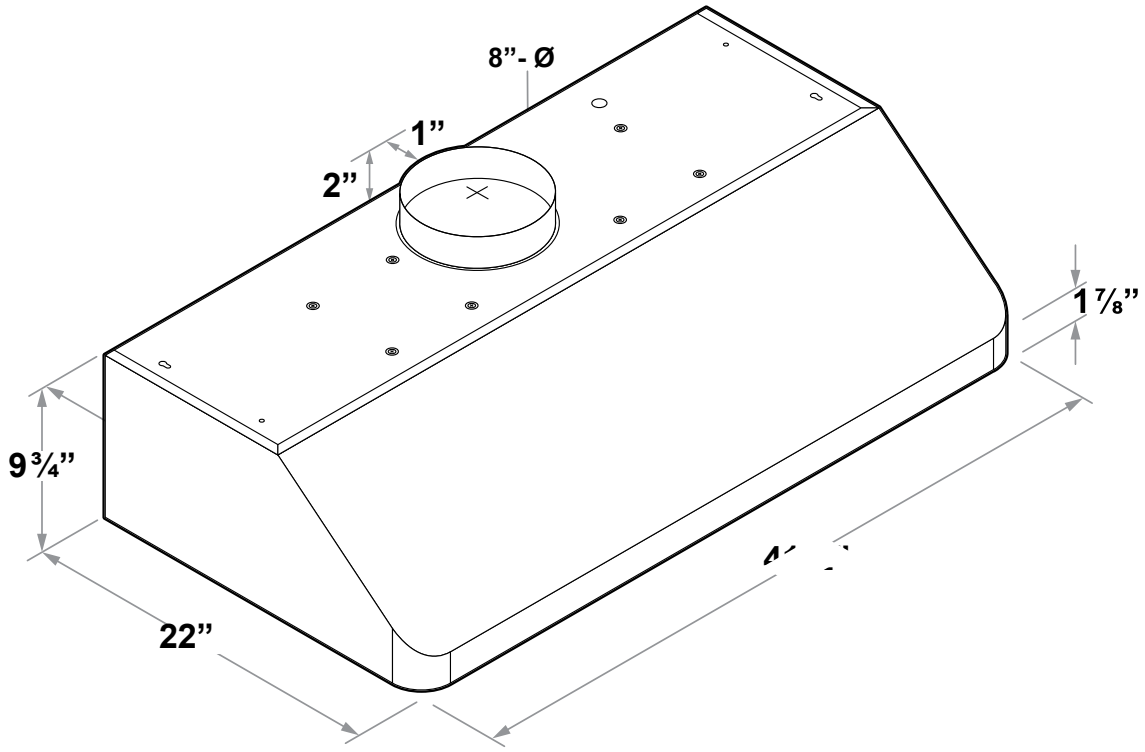

DIMENSIONS (Continued)

AP238-PS15-48

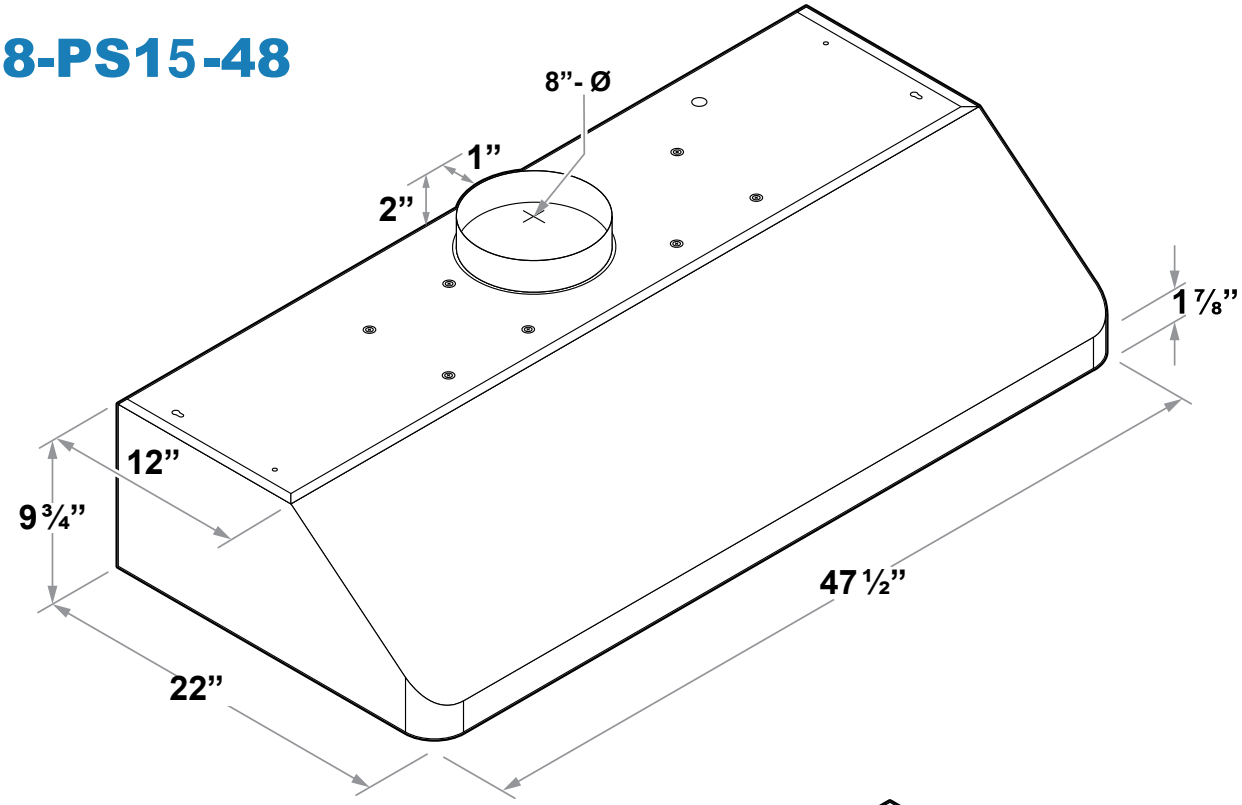

AP238-PS15-60

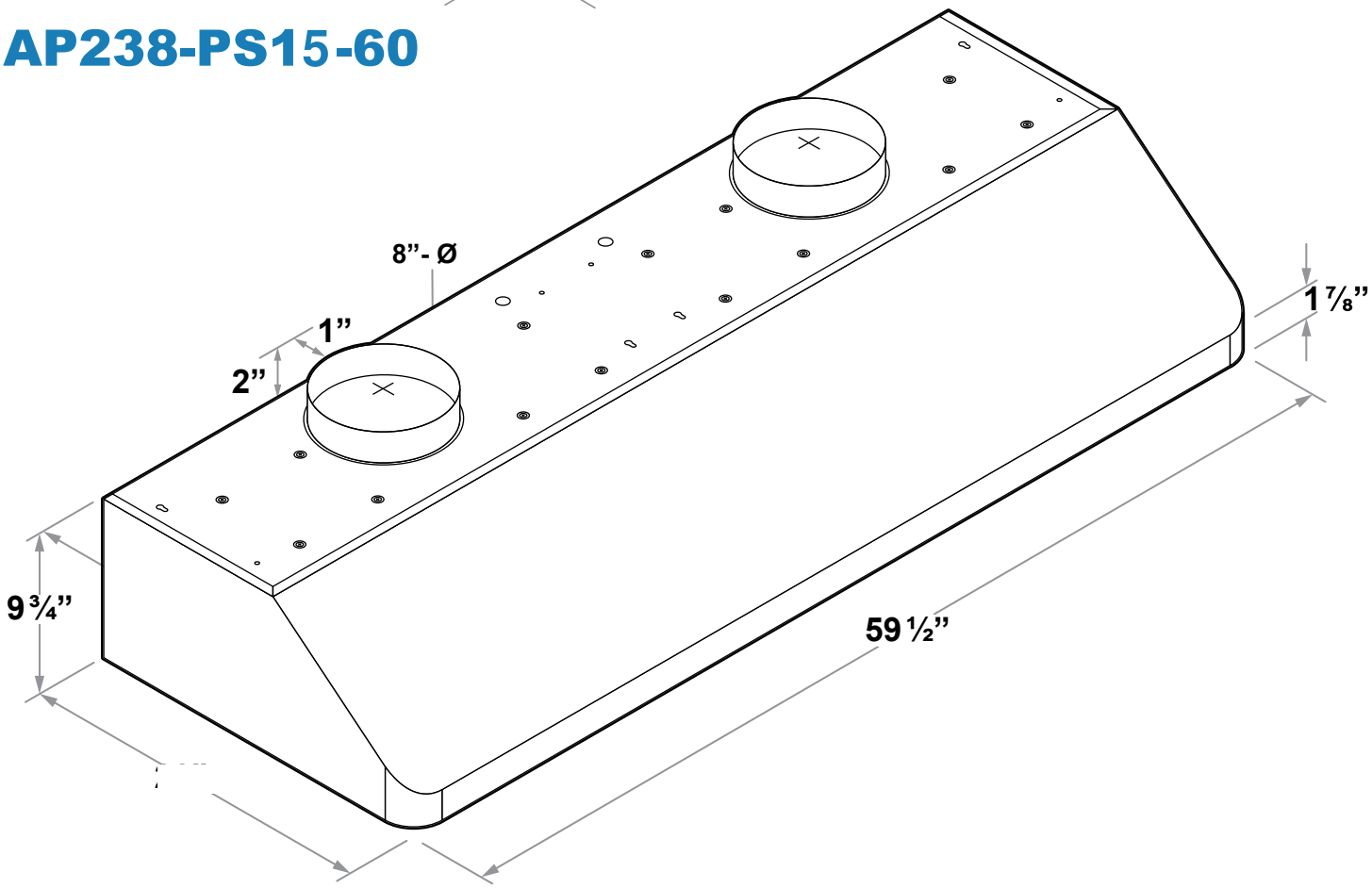

PREPARATION

⚠ WARNING

Severe Injury

Hood may have very sharp edges. Please wear protective gloves if it is necessary to remove any parts for installing, cleaning or servicing.

⚠ WARNING

Excessive Weight

Require three or more persons to move and install this range hood. Spinal or other bodily injuries could occur if it is not followed.

BEFORE INSTALLING THE RANGE HOOD, CHECK FOR PHYSICAL DAMAGES.
THIS RANGE HOODS COMES WITH A WIRE AND PLUG.
TEST THE HOOD BEFORE INSTALLATION.

If there is a grinding noise coming from the motor, **DO NOT INSTALL IT**, contact us as soon as possible.

Advanced Preparations:

1. Read the entire installation guide and users manual thoroughly, understand instructions and warnings.
2. Be familiar with the controls of the range hood.
3. Place the range hood on a flat, stable surface. Connect the range hood to a designated standard outlet (please refer the product label for the suitable voltage of this unit) and verify no debris has entered the duct openings, then turn on the range hood.
4. Place all supplied parts and required hardware on a flat, stable surface and verify the existence of all supplied parts.
5. Carefully remove the white/blue plastic protective coat from the chimney covers and range hood if any.

Preparations:

NOTE: To avoid damage to your hood, preduct debris from entering the duct opening.

1. Determine and mark the center line on the ceiling where the range hood will be installed. Make sure there is proper clearance within the ceiling or wall for exhaust duct.
2. Due to the weight and size of this unit, please make sure that the support system or framework being used is stable and secure in the ceiling.
3. Put a thick, protective covering over counter top, cook top or range to protect from damage or dirt. Remove any hazardous objects around the area when installing.
4. Mark the locations of the support mounting bracket holes, vent cutout (if used) and power supply cable cutout on the ceiling. Use drill and saber saw or keyhole saw to cut openings for power supply cable and duct.
5. Use caulking to seal exterior wall or roof openings.
6. Disconnect main electrical supply, prepare and run electrical wiring through ceiling. Leave approximately 12” of electrical cord hanging from the ceiling. Do not restore power until wiring is completed.
7. Disconnect power cord, remove the stainless steel baffle filter and grease tunnel.
8. Set aside the stainless steel baffle filters and grease tunnel until the range hood is properly installed.

INSTALLATION

NOTE: To install directly under the cabinet, there is no need to install the Mounting Bracket at the back of the range hood.

(2) Measure the distance between the stove top and the bottom of range hood. A distance of 24” to 30” is recommended*.

**Due to different ceiling height configurations, recommended height may not be applicable.*

Preferred areas to install wall or roof vent ducting.

Wall or roof vent may be installed in these areas but not recommended.

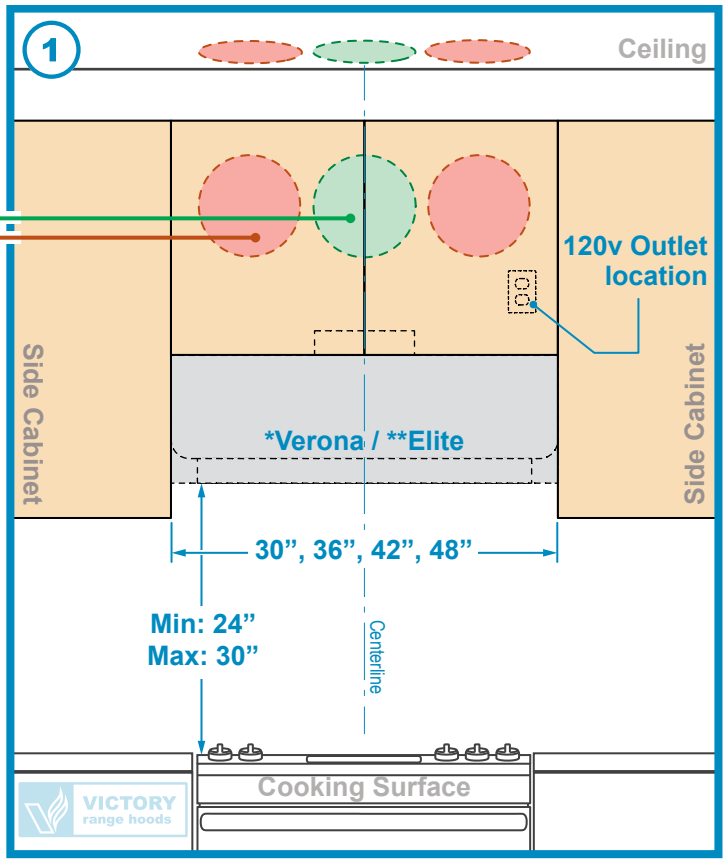

FRONT VIEW

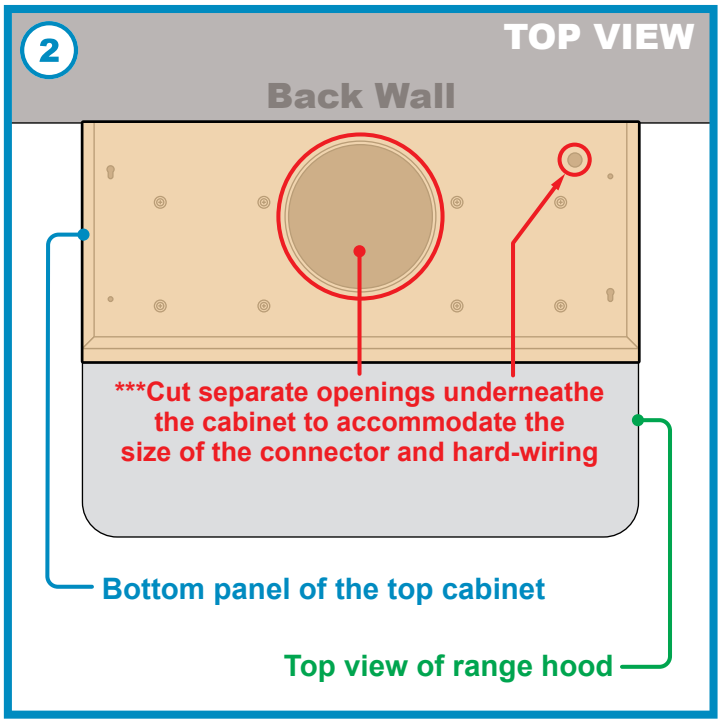

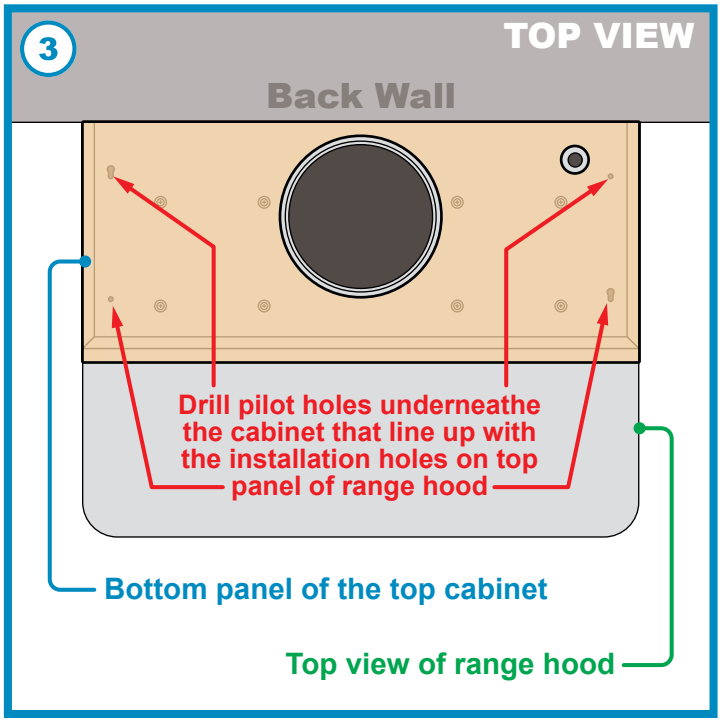

INSTALLATION (continued)

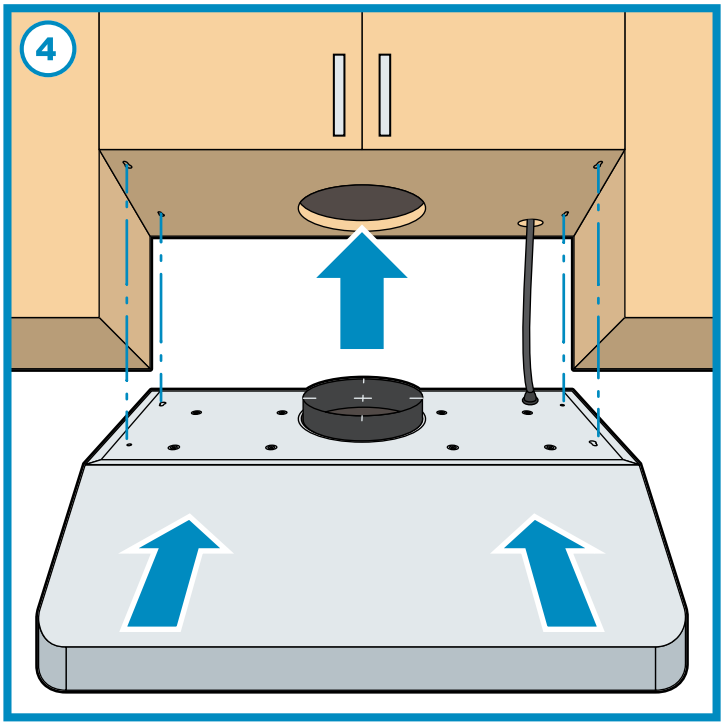

(1) Lift and insert the range hood underneathe the cabinet. Ensure the wiring passes through the opening created below the cabinet.

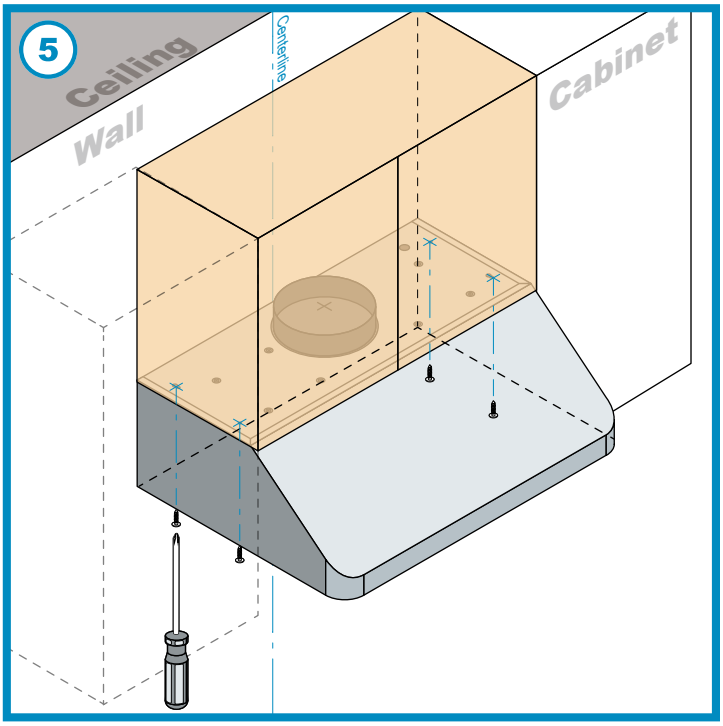

(5) Screw in woodscrews (not included) from inside the top panel of the range hood mounting to the bottom panel of the existing wall-mounted cabinet.

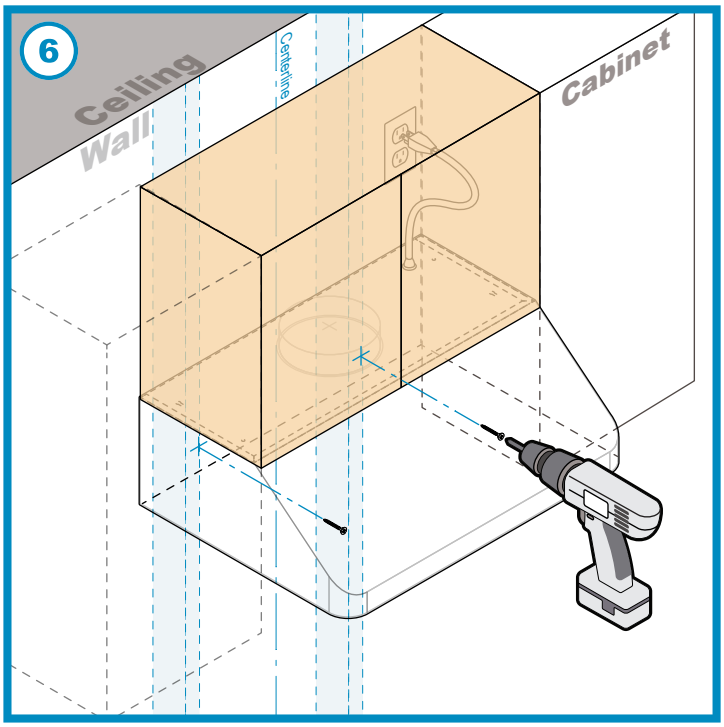

CAUTION: Make certain the range hood is secure before releasing!

WARNING

Hazard of electrical shock!

DO NOT perform service on an electrically live system. Disconnect the main electrical supply before servicing this device. Touching electrical connectors or other exposed electrical circuitry inside this range hood when they are energized could result in death, serious bodily injury, or property damage.

WARNING

Severe Injury

Rotating fan can cause severe injury.
Stay clear of fan when motor is running.

(6) From the inside rear panel of the range hood, use woodscrews (not included) to mount into the studs based on your measurements already established in the pre-drill. Connect the range hood's electrical wiring and check the fan motor and lights are functioning. Be alert of any electrical hazards and refer to the product label for the suitable voltage of this unit.

INSTALLATION (continued)

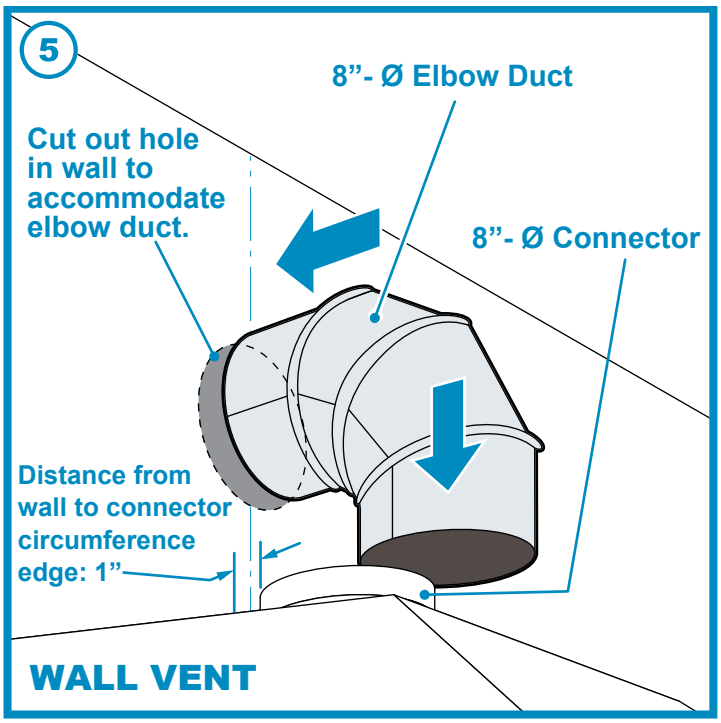

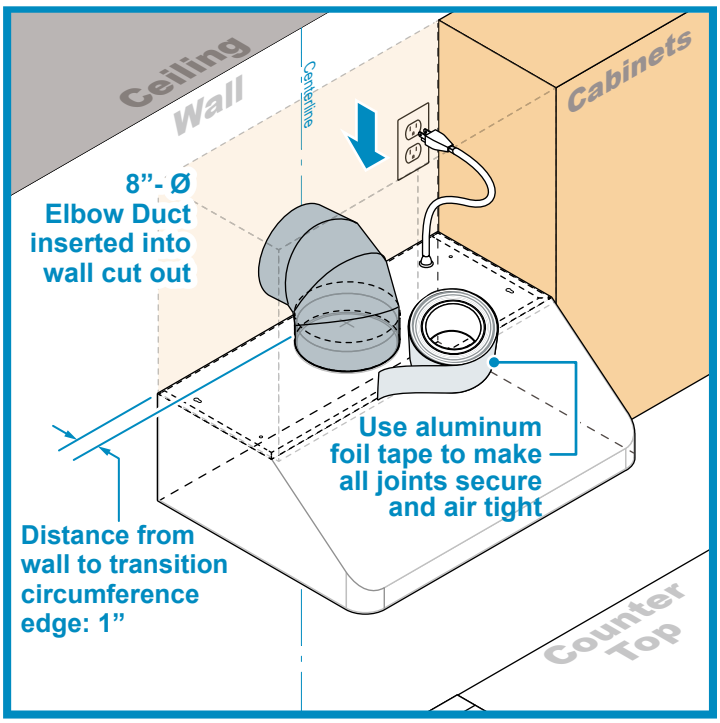

*Distance from wall to transition circumference edge for 8” - Ø Transition will be 1”. Use aluminum foil tape to make all joints secure and air tight.

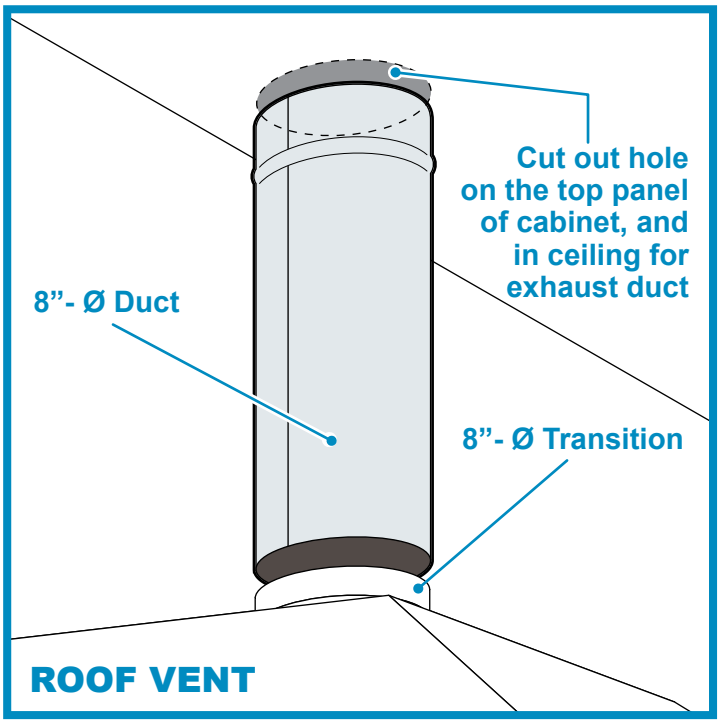

Use 8” round steel pipe to connect the exhaust on the hood to the ductwork above. Use aluminum foil tape to make all joints secure and air tight.

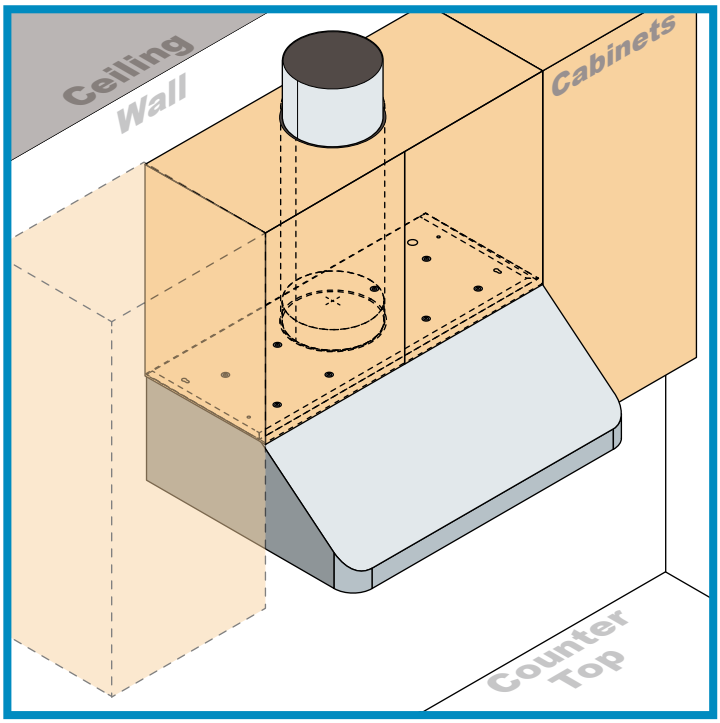

Ensure the cylinder duct passes through, leading to the roof cut out for exhaust connecting duct.

GREASE TUNNEL & FILTERS

BOTTOM VIEW

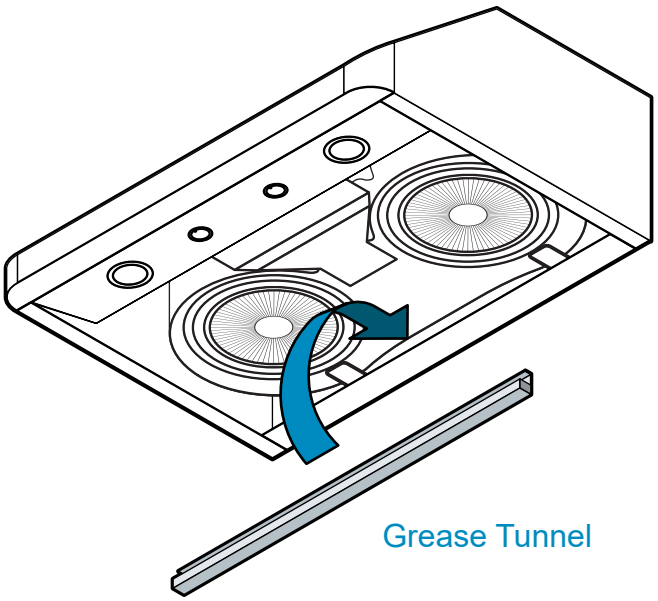

Place Grease Tunnel into the hood opening and insert into slot holding, as shown below.

SIDE VIEW

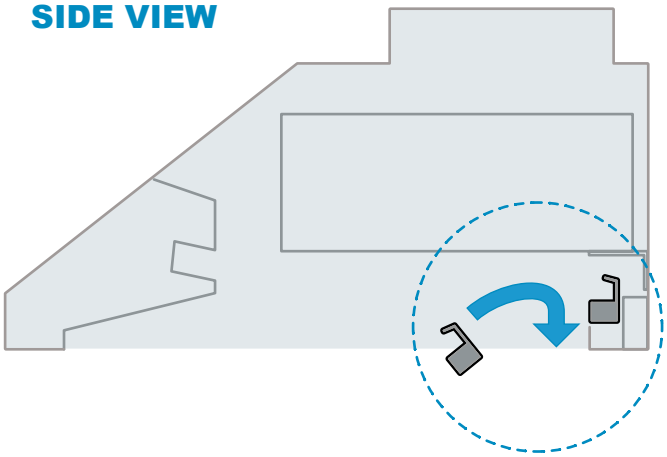

Filter spacer will vary in size and amount depending on model.

Baffle Filter

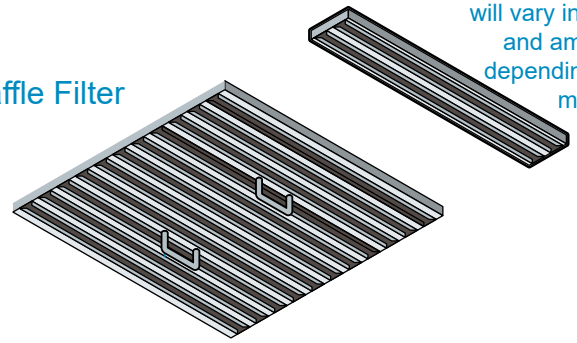

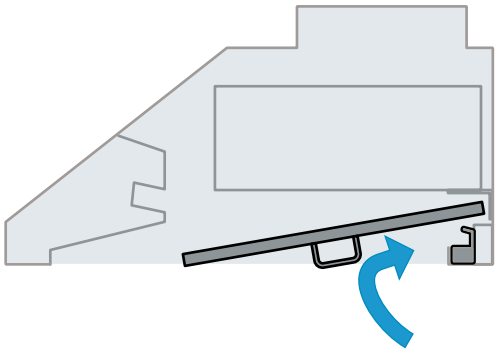

Angle filter toward rear of hood opening above the grease tunnel.

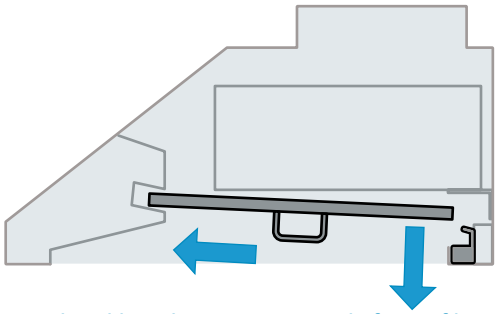

Slide forward and into the recess towards front of hood and above the light panel.

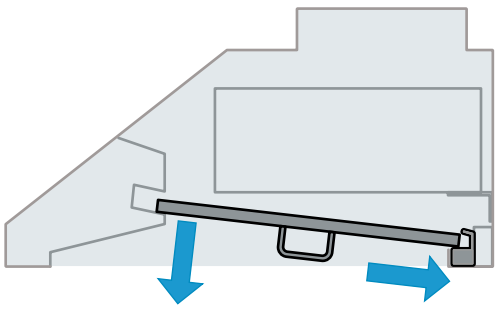

Lower filter while sliding back until it rests onto Grease Tunnel.

VENTING METHODS (side view)

- This range hood is factory set for venting through the roof or wall.
- Duct work can terminate either through the roof or wall. To vent through a wall, a 90° elbow is needed.

- NEVER exhaust air or terminate duct work into spaces between walls, crawl spaces, ceiling, attics or garages. All exhaust must be vented to the outside.
- Use metal/aluminum duct work only.
- Fasten all connections with sheet metal screws and tape all joints with certified Aluminum Tape.
- Use caulking to seal exterior wall or roof opening around the cap.
- Colder climates require wrapping insulation around the ducts and optional blowers.
- The system must have a Backdraft Damper.

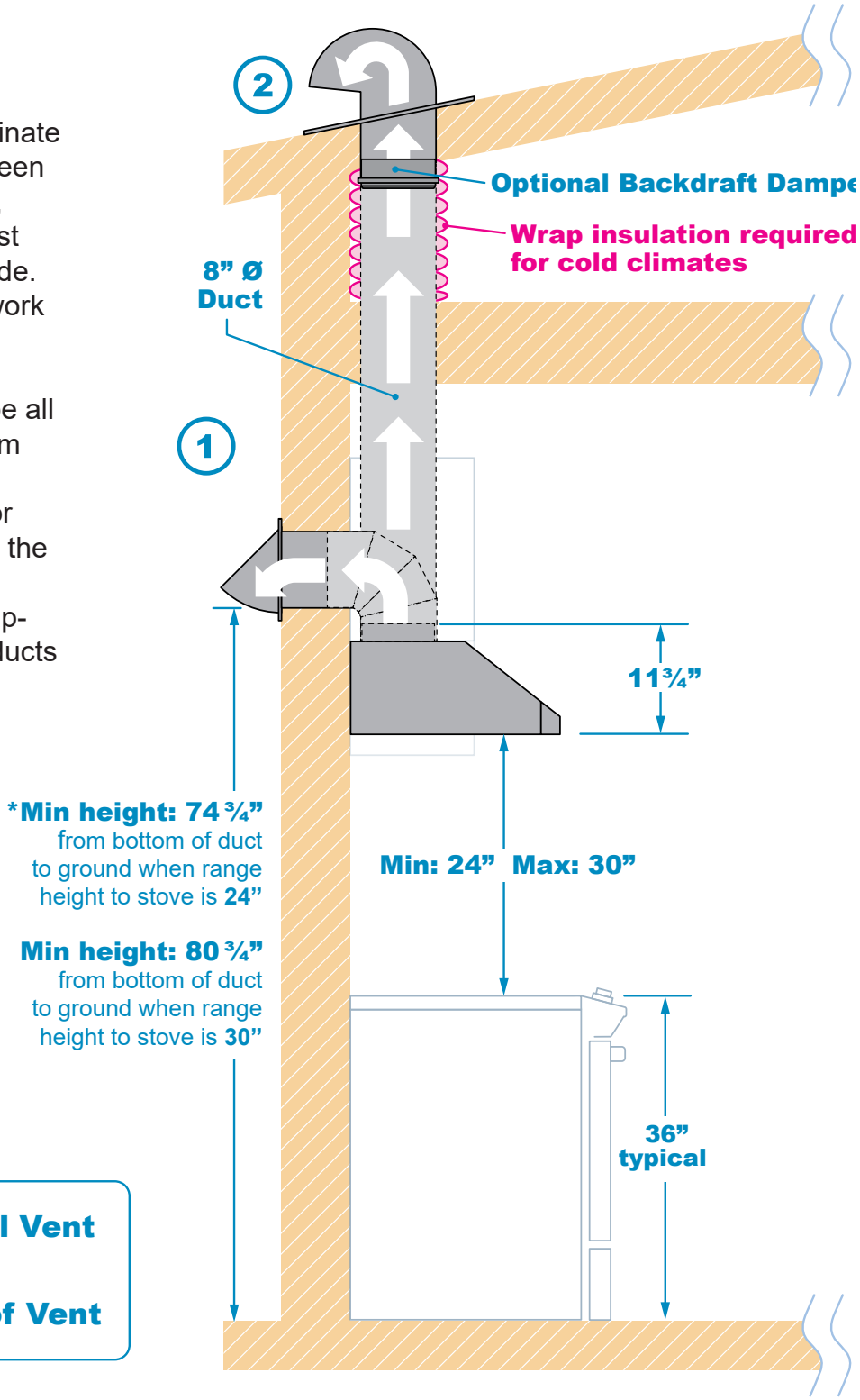

* Due to different ceiling height configurations, recommended height may not be applicable.

VENTING METHODS (front view)

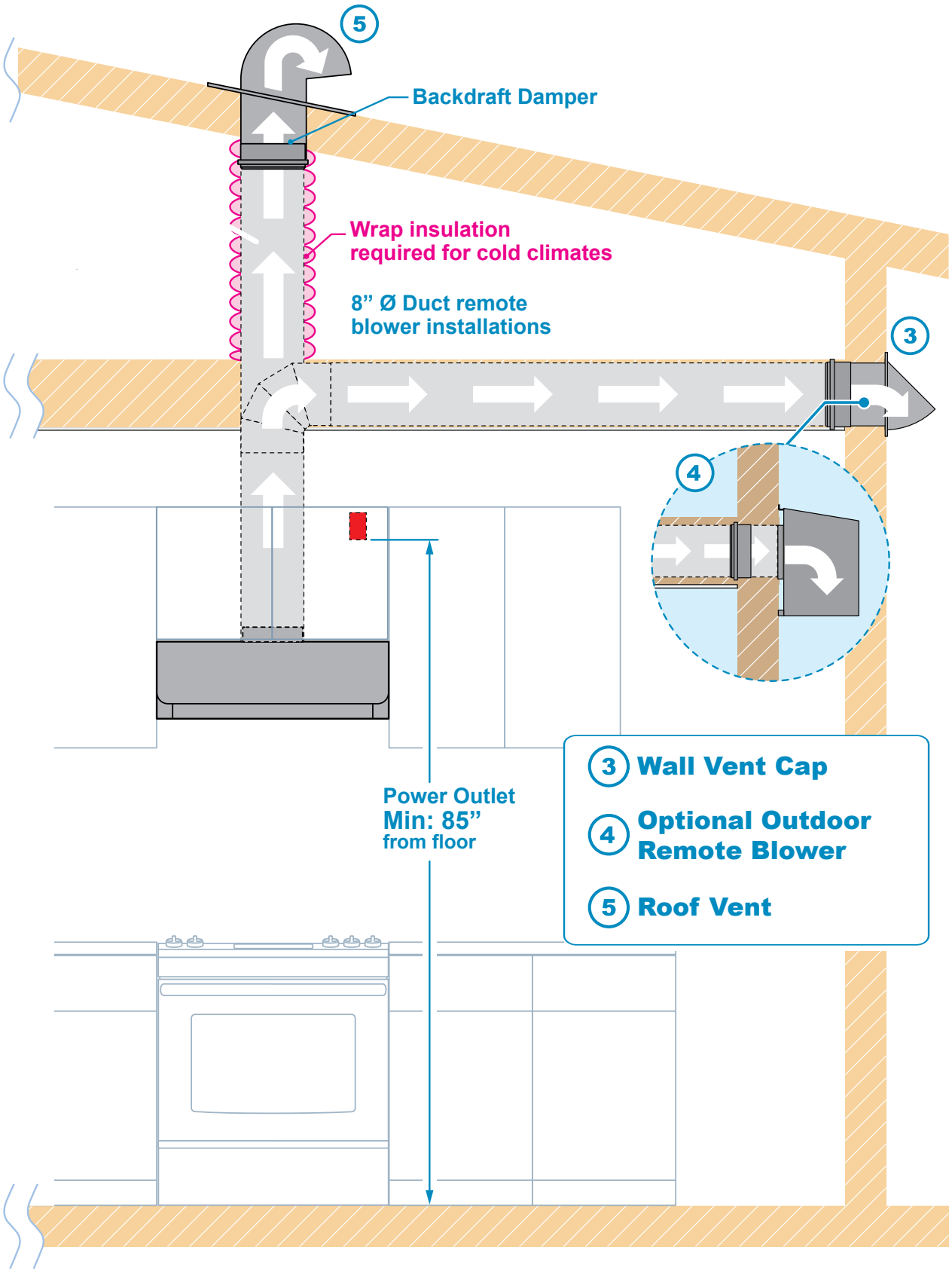

* Due to different ceiling height configurations, recommended height may not be applicable.

WIRING DIAGRAM

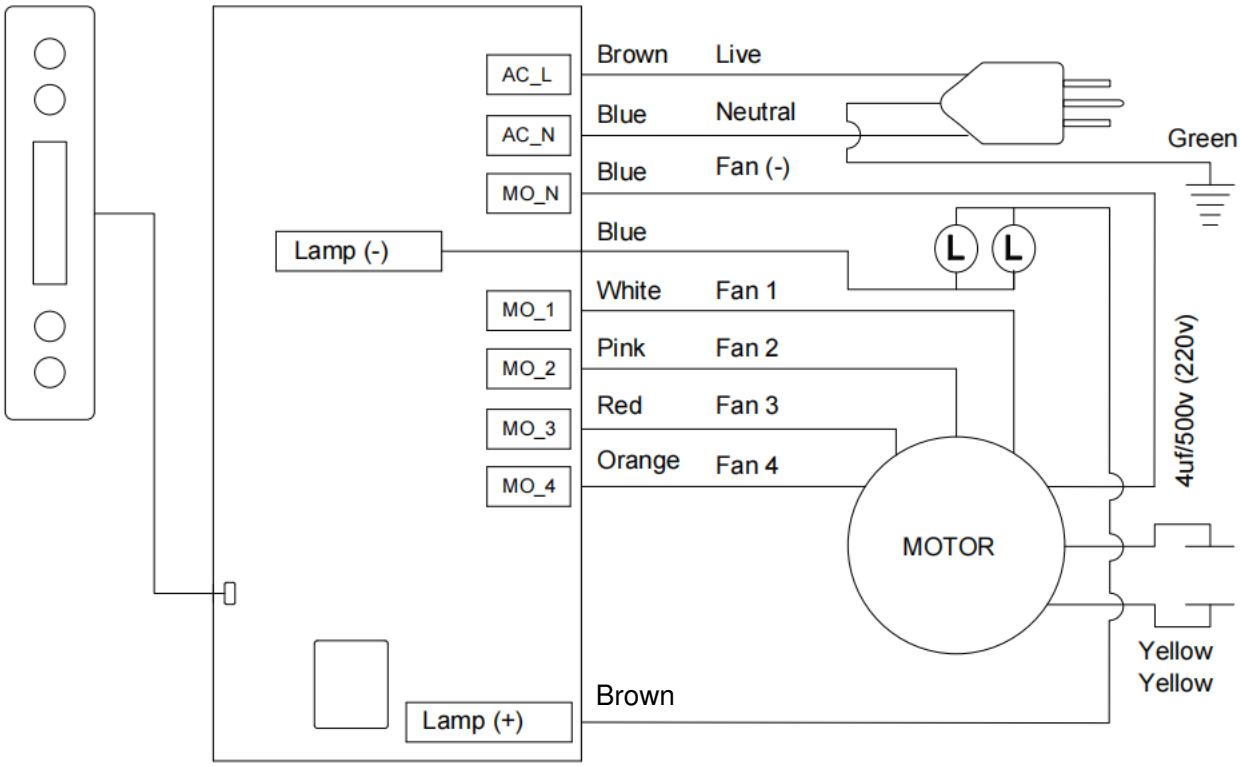

RANGE HOOD OPERATIONS

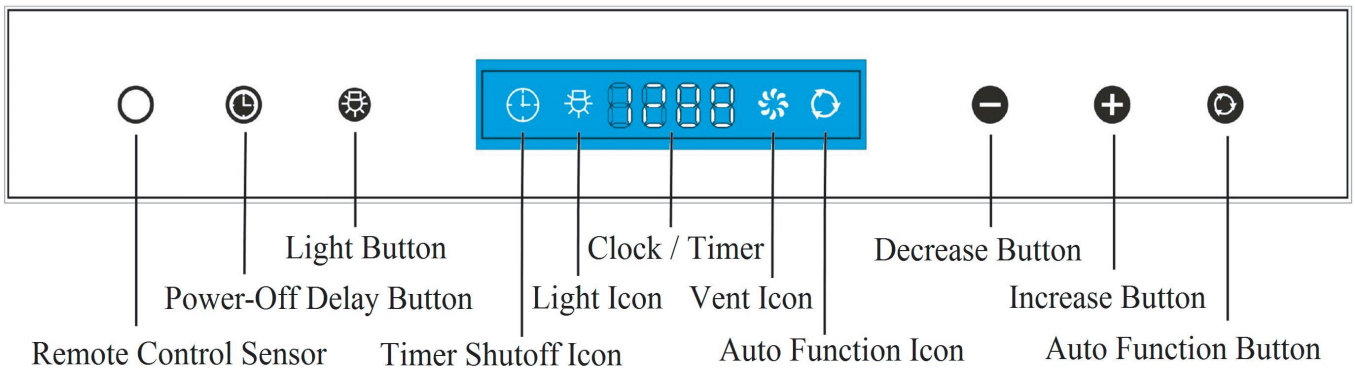

In addition to the remote control feature, this range hood is also equipped with a heat sensor that will self-calibrate in 5 seconds when the range hood is first electrically activated when selfcalibration is done. To con-serve energy, the LCD panel will turn off automatically after 5 seconds of inactivity. For the best results, start the range hood before cooking and allow it to operate several minutes after the cooking is completed to clear all smoke and odors from the kitchen.

RANGE HOOD OPERATIONS

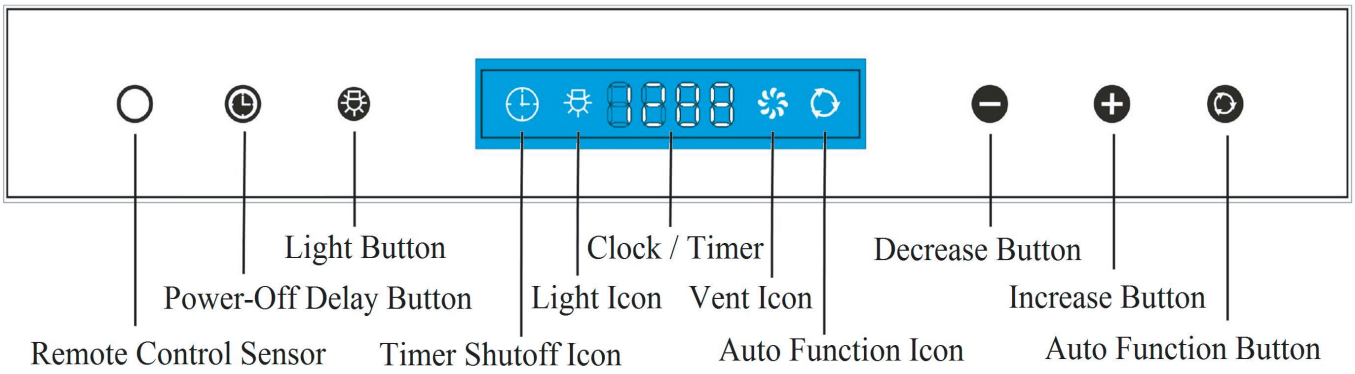

Activating Light Function:

- Press Light button once to turn on the lights, and once again to turn off the lights.

CAUTION:
DO NOT touch the lights or surrounding surface until turned OFF and allowed to cool

Activating Power-Off Delay Function:

TROUBLESHOOTING

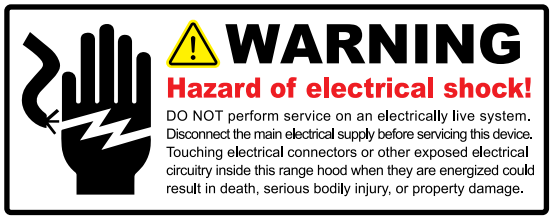



1. If the range hood or lights do not operate after installation:
   - Check if the range hood has been plugged in, make sure that all power has been turned back ON, fused not blown and all electrical wiring are properly connected.
   - Swap out light assembly to working ones to determine whether it is caused by defective bulbs. *See Replacing the light bulbs page.*

2. The range hood vibrates when the blower is on:
   - The range hood might not have been secured properly on to the ceiling or wall.
   - The impeller may be out of balance.

3. The blower or fan seems weak:
   - Duct is too small. Range hood WILL NOT function efficiently with insufficient duct size. For example: Connecting this hood to 4", 5" or 6" duct will reduce the suction and create extra noise and vibrations. Check if duct is clogged or if damper unit is not installed correctly or opening properly. A tight mesh on a side wall cap unit might also cause restriction to the air flow.

4. The lights work but the blower is not spinning at all, is stuck or is rattling.
   - The blower might be jammed or scraping the bottom due to shipping damage. Please contact us immediately.

5. The hood is not venting out properly:
   - Make sure the distance between the stove top and the bottom of the hood is within* 24" and 30" in distance. **Due to different ceiling height configurations, recommended height may not be applicable.*
   - Reduce the number of elbows and length of duct work. Check if all joints are properly connected, sealed, and taped.
   - Make sure the power is on high speed for heavy cooking.
   - The duct size must be 8", or larger. Please make sure there are NO reducers or plenums in the duct work.

NOTE: *For all other inquiries, please contact Infernus Range Hoods.*

DO'S AND DON'TS FOR DUCT VENTING

a. Avoid the use of sharp elbows. Use 45 degrees instead, if possible.
b. DO NOT use REDUCERS. Keep the size of the duct the same, as per the manual. A reducer will reduce the CFM of the hood and increase the noise.
c. DO NOT use plenum boxes. Boxes create turbulence and make the hood inefficient. Use a smooth elbow to guide the air outdoors.

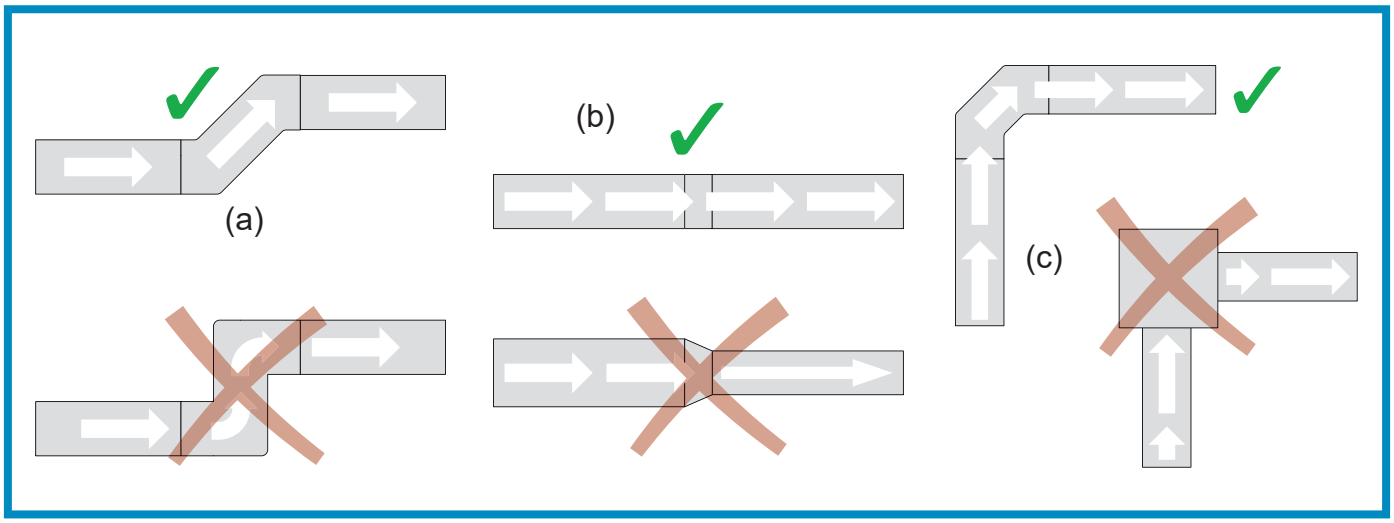

BULB REPLACEMENT

WARNING
Hazard of Burns
Light bulb can become extremely hot when turned on. DO NOT touch bulb until switched off and cooled. Touching hot bulbs could cause serious burns.

WARNING
Hazard of electrical shock!
DO NOT perform service on an electrically live system. Disconnect the main electrical supply before servicing this device. Touching electrical connectors or other exposed electrical circuitry inside this range hood when they are energized could result in death, serious bodily injury, or property damage.

Replacing the 3W 12V LED Light Bulb :

1. Should the light bulb burned out due to age and prolonged use, replace with following: LED 3W 12V
2. Make sure the range hood is unplugged or turn OFF breaker and the lights are cool to touch.
3. Place a flat-head screwdriver between light housing and hood body, gently pry up the light housing and search for the metal clip.
4. Apply force to the metal clip and pull out the light fixture. Disconnect the power cable and discard the old light fixture.
5. Reverse the steps to install a new light finture. Turn ON breaker and range hood to test for operation.

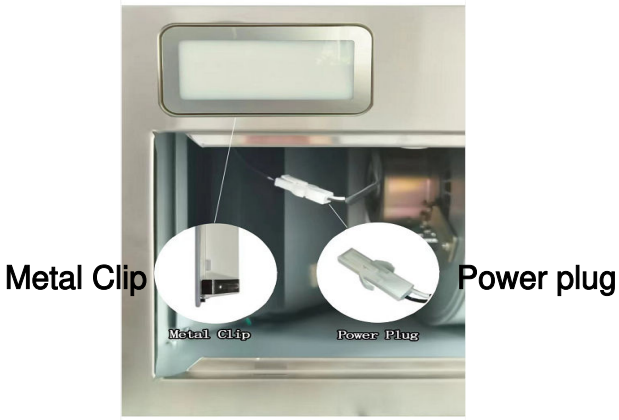

MAINTENANCE

Operations:

- Read and understand all instructions and warnings in this manual before operating the appliance. Save these instructions for future reference.
- Always leave safety grills and filters in place. Without these components, operating blowers could catch on to hair, fingers and loose clothing.
- NEVER dispose cigarette ashes, ignitable substances, or any foreign objects into blowers.
- NEVER leave cooking unattended. When frying, oil in the pan can easily overheat and catch fire. The risk of self combustion is higher when the oil has been used several times.
- NEVER cook on “open” flames under the range hood. Check deep-fryers during use: Superheated oil may be flammable.
- The saturation of greasy residue in the blower and filters may cause increased inflammability. Keep unit clean and free of grease and residue build-up at all times to prevent possible fires.
- Filters must be cleaned periodically and free from accumulation of cooking residue. Old and worn filters must be replaced immediately.
- **DO NOT** operate blowers when filters are removed. Never disassemble parts to clean without proper instructions. Disassembly is recommended to be performed by qualified personnel only. Read and understand all instructions and warnings in this manual before proceeding.
- **SAFETY WARNING:** Never put your hand into area housing the fan while the fan is operating!

Cleaning Exterior surfaces:

- Clean periodically with stainless steel cleaner and clean cotton cloth. Do not use corrosive or abrasive detergent (e.g. Comet Power Scruv®, EZ-Off® oven cleaner), or steel wool/scoring pads, which will scratch and damage the stainless steel surface. For heavier oil use liquid degrease such as “Forumla 409®” or “Fantastic®” brand cleaner.
- If the hood looks splotchy (stainless steel hood), use a stainless steel cleaner to clean the surface of the hood. Avoid getting cleaning solution onto or into the control panel. Follow directions of the stainless steel cleaner. **CAUTION: Do not leave on too long as this may cause damage to the hood finish.** Use a soft towel to wipe off the cleaning solution, gently rub off any stubborn spots. Use a dry soft towel to dry the hood.
- After cleaning, you may use non abrasive stainless steel polish such as 3M® or ZEP®, to polish and buff out the stainless luster and grain. Always scrub lightly, a with clean cotton cloth, and with the grain.
- DO NOT allow deposits to accumulate or remain on the hood.
- DO NOT use ordinary steel wool or steel brushes. Small bits of steel may adhere to the surface and cause rusting.
- DO NOT allow salt solutions, disinfectants, bleaches, or cleaning compounds to remain in contact with stainless steel for extended periods. Many of these compounds contain chemicals, which may be harmful. Rinse with water after exposure and wipe dry with a clean cloth.

Cleaning Aluminum Grease Filter / Stainless Steel Filterless Grill:

- **IMPORTANT: Drain oil from oil containers before oil and residue overflow!**
- The metal filters fitted by the factory are intended to filter out residue and grease from cooking. It need not be replaced on a regular basis but are required to be kept clean.
- Filters should be cleaned after every 30 hours of use.
- Remove and HAND WASH ONLY. Spray “Formula 409®” or equivalent degreasing detergent and leave to soak if heavily soiled. Dry filters and re-install before using hood.

Replacing Filters:

- Should filters wear out due to age and prolonged use, please contact Victory Range Hoods to order
- Note: Also replace damaged filter that has punctured or broken mesh, bent or broken frame.

NOTE: *For all other inquiries, please contact Infernus Range Hoods.*

WARRANTY

TO OBTAIN SERVICE UNDER WARRANTY:

You must present proof of original purchase date.

Please provide an original dated proof of purchase (sales receipt / invoice) in order to obtain service under warranty.

Five Year Parts Warranty:

For five years from the date of original purchase, Infernus Range Hoods will provide free of charge, non-consumable replacement parts or components that failed due to manufacturing defects. Subject to the conditions and limitations set forth below, Infernus Range Hoods will replace any part of its products that prove defective by reason of improper workmanship or materials. Replacement parts or products will be provided by Infernus Range Hoods on an exchange basis, and will be either new or refurbished to be functionally equivalent to new.

Who is Covered:

This warranty is extended to the original purchaser for products purchased for ordinary home use.

This Warranty Will Be Voided When:

Product is damaged through negligence, improper installation, accident, abuse, misuse, natural disaster, insufficient or excessive electrical supply, abnormal mechanical or environmental conditions, or any unauthorized disassembly, repair, modification, or failure to follow installation instructions. When product is used commercially or other than its intended purpose. Damaged because of improper connection with equipment of other manufacturers. Repaired or modified by anyone other than Infernus Range Hoods. This limited warranty also does not apply to any product on which the original identification information has been altered, obliterated or removed, has not been handled or packaged correctly or has been sold as second-hand.

What is Not Covered:

Consumable parts such as light bulbs, metal and charcoal filters. The natural wear of finish, and wear due to improper maintenance, use of corrosive and abrasive cleaning products, pads, and oven cleaner products. Chips, dents or cracks due to abuse, misuse, freight damage, or improper installation. Damage of product caused by accident, fire, floods or acts of God. The manufacturer and/or distributor/reseller is not liable for, and does not cover under warranty, any loss of properties or any costs associated with removing, servicing, installing, or determining the source of problems with this product.

This warranty is valid in UK market. It is non-transferable and applies only to the original purchaser and does not extend to subsequent owners of this product. Any applicable implied warranties, including the warranty of merchantability, are limited in duration to a period of express warranty as provided herein beginning with the date of original purchase and, no warranties, whether expressed or implied, shall apply to this product thereafter.

To obtain warranty service, you may contact Infernus Range Hoods. Please confirm the terms of Infernus Range Hood's policies prior to contacting us. Typically, you must include product identification information, such as the model number/name with a detailed description of the problem you are experiencing. You must also include proof of the date of original purchase as evidence that the product is within the applicable warranty period, and that it is a genuine range hood from Infernus Range Hoods.

The information in this document is subject to change without notice, please contact Infernus Range Hoods for updated details.

DISCLAIMER

Carefully inspect all items for damages before accepting delivery. note any damages on the freight bill or express receipt. request name and signature of the carrier's agent and keep a copy to support your claim. Upon acceptance of items, owner assumes responsibility for its safe arrival. Report damages to the carrier and file a claim immediately. Failure to do so may result in the denial of your claim. The carrier will furnish you with necessary forms for filing a claim.

Damages on any returns or exchanges caused during transit are not covered under our warranty (the customer must insure the return with the shipping company). If your range hood is damaged in transit, please contact us within 14 days of receiving your new order to report the damages. Victory Range Hoods will, to the best of its ability, file a damage claim and investigate the matter.

Please inspect contents of package(s) carefully upon receiving! We must be notified of any damages and/or missing parts within fourteen (14) days upon your receipt of the package(s). Claims will not be accepted after fourteen (14) days. NOTE: Items are thoroughly tested and carefully packed in our facility before shipping.

Products must be returned in good working condition with ALL original parts and documentation packed in all original cartons, fillers and shipping cartons. A restocking fee of 10% will be charged for all approved return(s). Exchanges or returns will not be accepted if the unit has been installed, and may be rejected if parts are missing.

Make sure to inspect the hood for damages and defects before installation. Appearance flaws of the hood found after installation and not affecting hood performance are not covered under our warranty for returns or exchanges. Service visits are not covered under warranty and will carry a service charge.

CONTACT US

If you require assistance, please contact Infernus Range Hoods. Please have your order number and model of the range hood ready. You must have this information in order to receive a response to your request.

If you need replacement parts, we recommend using only genuine parts. Our accessories and parts are engineered and designed specifically for Infernus range hoods. Each part is rigorously tested assuring the utmost in durability and reliability, providing a factory match, factory-installed appearance and functionality tailored to each individual range hood model.

The information in this document is subject to change without notice, please contact Infernus Range Hoods for updated details.


infernus