Table type of combination stove is the latest stove by our factory developed and designed. It is all stainless steel body and strong durable. The products provides with the advantages of good-looking、 reasonable structure、 easy operation. The whole sets of table type combination stove include the following six sets: table electric griddle、table lava broiler、table noodle cooker、table electric Bain Marie、table 2-tanks electric fryer、table 4-head heating cooker. These stoves can use individual and also use combined. Thus it is your ideal assistant in the western restaurant, singing and dancing hall and snack bar shop.

The table electric fryer is one of the whole sets combination. In order to make full use of the function of these products and minimize unnecessary loss and damages, please read the manual carefully and keep it for future reference.

## 一. Basic Parameter

| Item No | Name | voltage | Power | Dimensions |
|---|---|---|---|---|
| **INF-NC2** | **Counter Top Electric Pasta Cooker** | **220-240** | **2KW** | **250*460*320mm** |
| **INF-NC4** | **Counter Top Electric Pasta Cooker** | **220-240** | **2.8kW** | **410*570*280mm** |
| **INF-NC6** | **Counter Top Electric Pasta Cooker** | **220-240** | **2.85kW** | **590*570*280mm** |

## 二. Operation Instruction

1. Three thermostats are installed on the top of noodle cooker; it can use individual and also use combined. Left-thermostat is control the pot temperature on the left side. Middle-thermostat is control the middle pot temperature. Right-thermostat is control the pot temperature on the right side.

2. Plug in and turn on the power when the green light is on. Rotate the temperature controller in clockwise direction to the required temperature scale value, and at this time yellow indicator light is on, green light is off; which shows the heating tube is working. When the temperature reaches the required value, the temperature controller can cut off power automatically and green light is on, yellow indicator light is off. At the same time and the heating tube stops working. When temperature starts to lower down slightly, temperature controller can connect the power automatically and yellow indicator light is on and green light is off, and the heating tube resumes to work and temperature rises. It circulates like this from time to time to ensure that temperature can be set within the range of constant temperature.

3. Cooking noodle is according to personal taste to adjust the required temperature.

4. If the noodle cooker happened the abnormity phenomena in the course of operation, it should be stop working and check the trouble of machine. When repair it well and start to use.

## 三. Trouble shooting:

| Trouble | Cause | Solution |
|---|---|---|
| 1. Plug in and turn on the power, indicator light is not on | 1. Power switch fuse break off<br>2. Not well plug in | 1. Replace the proper fuse<br>2. Fix power cable and plug in again |
| 2. Yellow indicator light is on but oil temperature does not rise | 1. Indicator light connection is wrong<br>2. Temperature controller is broken. | 1. Correct connection<br>2. Replace the temperature controller |
| 3. Indicator light can not be on and temperature controller is normal | 1. Indicator light is connected not well.<br>2. Indicator light is broken | 1. Fix connection<br>2. Replace indicator light |

## 四. Precautions for installation

1) The unit should be located a level place and both sides are from incombustible (walls and block) over 10cm, the backside should be far from over 20cm.
2) The voltage of this product must accord with the voltage of supplied power.
3) The proper power switch and fuse should be installed near the unit. For the sake of operation convenient, users do not allow to pile sundries on the front of switch.
4) Electric potential linked terminal should be placed under the backside of the unit and connect it according to the safety rules.
5) There is a copper bolt at the back of the stove. Use a copper core wire to be grounded according to the safety rules.
6) Check if any wiring loose, voltage normal, grounded well before using.

**The crust of this stove should be grounded well to ensure your safety. Thanks for your cooperation.**

## 五. Transportation and storage

Fierce shocking and collision should be prevented during transportation. When the product is not used for a long time, it should be put in a draught, dry and no causticity gas warehouse; when it needs to be stored temporarily, measures for preventing from raining and safety should be made.

## 六. Cleaning and maintenance

1) Cut off power before cleaning for safety.
2) Clean with a wet towel with cleanser containing no causticity after finish using every day. Direct rinse with water is strictly prohibited which can cause water leak into the control box and damage the electric performance.

## 七. Circuit diagram:

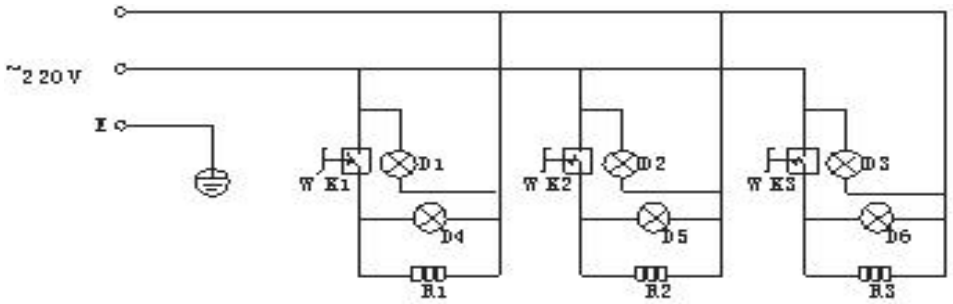


WK1、WK2、WK3—temperature controller
D1、D2、D3—power indicator lamp
D4、D5、D6—heating indicator lamp
R1、R2、R3—electric heating tube

infernus®

# Counter Top Electric Pasta Cooker

## USER'S MANUAL

CE UKCA