INSTRUCTIONS FOR USE AND MAINTENANCE

ELECTRIC OVENS FOR PIZZA
‘BASIC SERIES

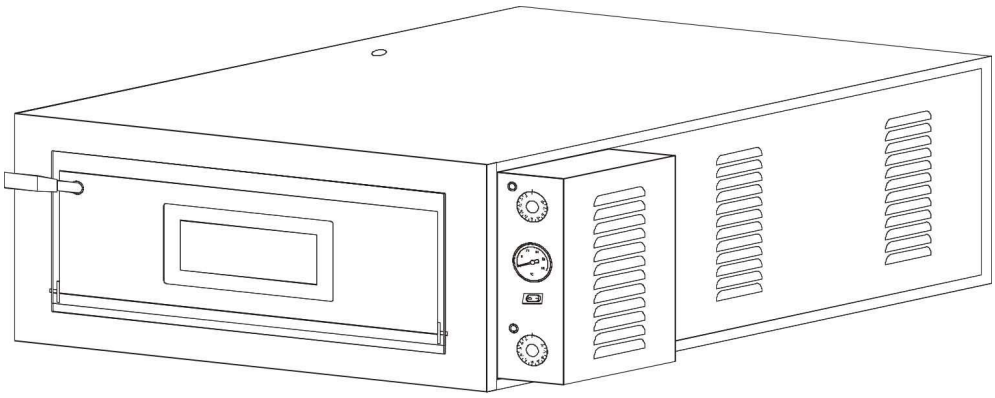

CE

ENGLISH

CE DECLARATION OF CE CONFORMITY

Declares that the oven

Complies with the requirements of the Directives:

“Low Voltage Directive” LVD 2014/35/EU

“Electromagnetic Compatibility Directive” EMC 2014/30/EU

“Regulations (CE) n. 1935/2004”

and it further declares that the following harmonized standards have been applied:

EN ISO 12100:2010
(Basic concepts for the safety of the machines and main principles for design)

EIC 60204-1: 2016
(Safety of machinery. Electric equipment of the machines)

Surname and Name:...GIACOMINI ERNESTO.....*Date:* ...../...../.....

Stamp and Signature: Giacomini Ernesto

INDEX
.....p. **5**

1- "CE" DECLARATION OF CONFORMITY AND MARKING
1.1- "CE" marking.....p. **6**

2- GENERAL REMARKS
2.1- The importance of the manual.....p. **6**
2.2- Status of "turned off oven" .....p. **7**
2.3- Warranty .....p. **7**
2.4- Reserved rights .....p. **7**

3- TECHNICAL DESCRIPTION
3.1- Denomination of the components .....p. **7**
3.2- Dimensions of oven and baking chamber .....p. **8**
3.3- Technical data.....p. **9**
3.4- Destination of use .....p. **9**
3.5- Limits of use.....p. **9**

4- HANDLING AND TRANSPORT
4.1- Transport and lifting .....p. **10**
4.2- Instruction sheet applied on the package .....p. **11**
4.3- Positioning .....p. **12**

5- INSTALLATION
5.1- Connection to the stack .....p. **12**
5.2- Electric connection.....p. **12**

6- SAFETY
6.1- Reference directives and standards .....p. **13**
6.2- Personal protective equipment (PPE).....p. **13**
6.3- Residual risks.....p. **13**

7- USE AND OPERATION
7.1- Control panel.....p. **14**
7.2- First commissioning .....p. **15**
7.3- Turning on of the oven.....p. **15**
7.4- Turning off of the oven.....p. **16**

8- MAINTENANCE
8.1- Routine maintenance.....p. **16**
8.2- Supplementary maintenance.....p. **16**

9- DEMOLITION
9.1- General warnings.....p. **17**

10- SPARE PARTS
Warnings .....p. **17**
Tables and drawings of spare parts.....p. **18**

11- ELECTRIC EQUIPMENT
Wiring diagrams and list of components .....p. **20**

12- ENCLOSURES
12.1- Lifting instruction sheet applied on the package.....p. **22**

1.1- “CE” MARKING

The CE marking is a printed label (black color) applied as shown in **FIG. 1**. The plate bears in readable and indelible way the following data:

- **Name of the manufacturer;**
- **CE marking;**
- **Model (MOD);**
- **Electric power (kW/A);**
- **“Made in Italy”**
- **Serial number (MATR);**
- **Electric voltage and frequency (Volt/Hz);**
- **Year of construction (ANNO);**
- **Weight of the oven (PESO);**

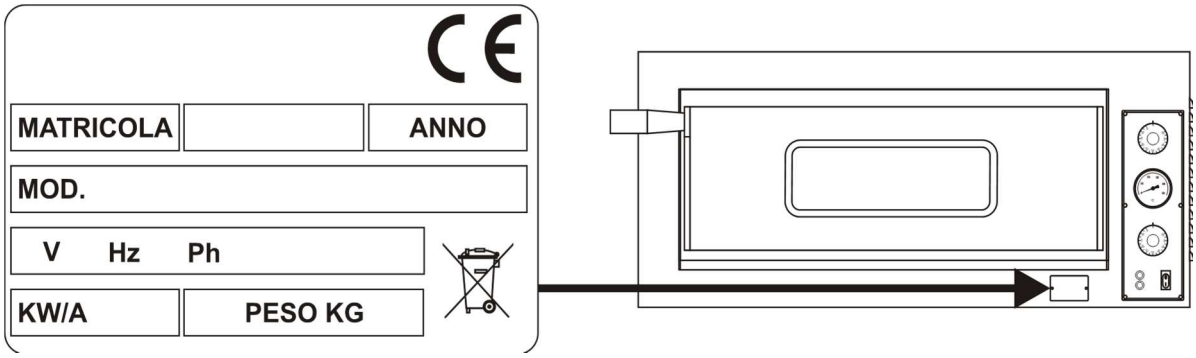

FIG.1 *(CE-marking)*

2.1– THE IMPORTANCE OF THE MANUAL

BEFORE USING THE CONCERNED OVEN, IT IS COMPULSORY TO READ AND UNDERSTAND THIS MANUAL IN ALL ITS PARTS.

THIS MANUAL MUST ALWAYS BE AVAILABLE FOR THE “AUTHORIZED OPERATORS” AND HAS TO BE PLACED AND PRESERVED CLOSE TO THE OVEN.

THE MANUFACTURER DECLINES ALL LIABILITY FOR EVENTUAL DAMAGES TO PERSONS, ANIMALS, AND THINGS CAUSED BY THE INOBSERVANCE OF THE REGULATIONS DESCRIBED IN THIS MANUAL.

THIS MANUAL IS AN INTEGRAL PART OF THE OVEN AND MUST BE PRESERVED UNTIL ITS FINAL DISMANTLING.

THE “AUTHORIZED OPERATORS” MUST PERFORM ON THE OVEN EXCLUSIVELY INTERVENTIONS FOR WHICH THEY ARE SPECIFICALLY COMPETENT.

2.2- STATUS OF "TURNED OFF OVEN"

Before performing any type of maintenance and/or adjustment intervention, it is compulsory to disconnect the power supply source, disconnecting the power supply plug from the mains outlet verifying that the oven is effectively turned off and cooled.

2.3- WARRANTY

The manufacturer warrants that the concerned ovens are tested at manufacturer's premises.
The warranty of the oven is of **12 (twelve) months**.

THE TAMPERING AND/OR REPLACEMENT OF PARTS WITH NON ORIGINAL SPARE PARTS CAUSE THE DECAY OF THE WARRANTY AND RELEASE THE MANUFACTURER FROM ANY LIABILITY.

2.4- RESERVED RIGHTS

The reserved rights concerning this technical manual, "Use and maintenance instructions" remain property of the Manufacturer. No part of the manual can be reproduced and disclosed by any reproduction means without prior written authorization of the Manufacturer.
All quoted trademarks belong to the related owners.

3– TECHNICAL DESCRIPTION

3.1 DENOMINATION OF COMPONENTS

FIG. 2 shows and contains the denominations of the components making up the oven.

3.2– DIMENSIONS OF OVEN AND BAKING CHAMBER

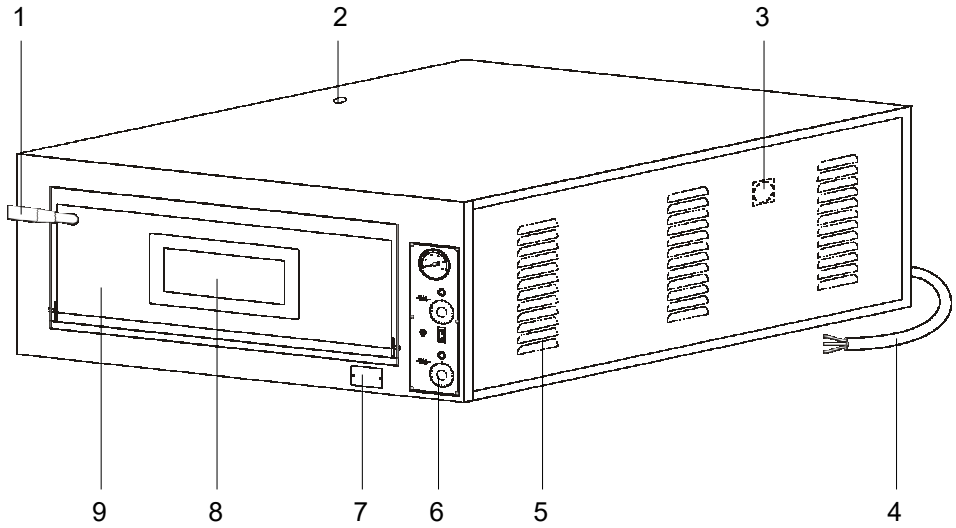

LEGEND:
1) Oven door handle
2) Steam discharge
3) Chamber light
4) Power supply cable (without plug)
5) Aeration openings
6) Control panel
7) CE marking
8) Inspection glass
9) Oven door

FIG.2 *(Denomination of components)*

FIG. 3 and TAB. 1, in the related views, give the overall dimensions of the oven and of the baking chamber.

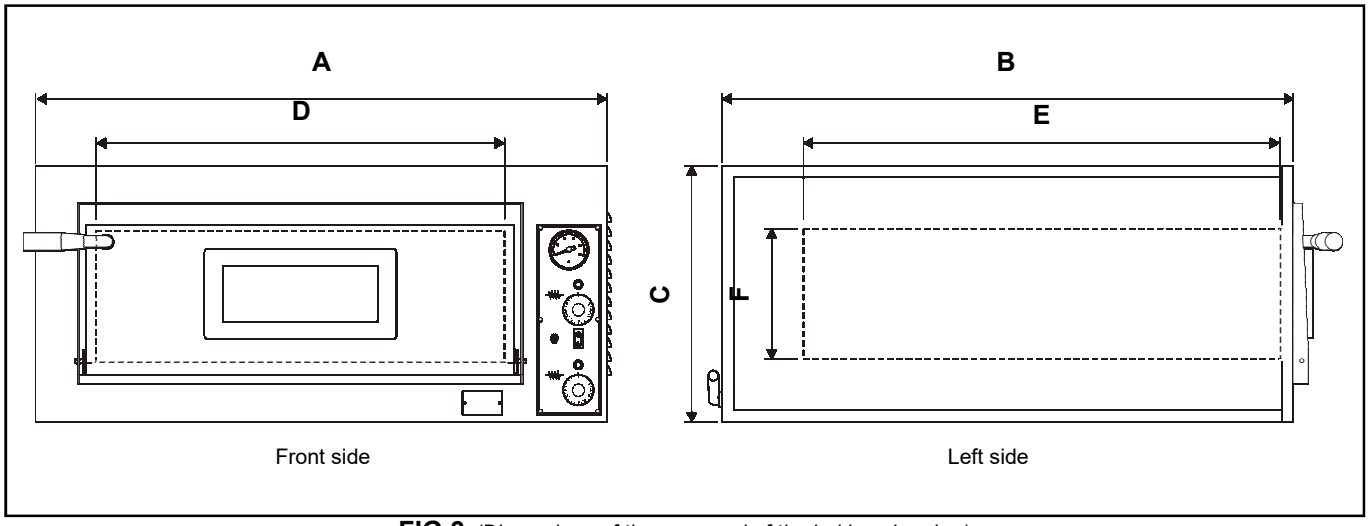

FIG.3 *(Dimensions of the oven and of the baking chamber)*

	DIMENSIONS (mm)					
	EXTERNAL			**BAKING CHAMBER**		
MODELS	**A**	**B**	**C**	**D**	**E**	**F**
BASIC 4	835	835	335	700	700	140
BASIC 44	835	835	545	700	700	140

TAB.1 *(Dimensions of the oven)*

3.3- TECHNICAL DATA

TAB. 2 gives the technical data characterizing the different oven models.

MODELS	BAKING CHAMBER (q.ty)	WEIGHT (kg)	ELECTRIC VOLTAGE (V)	ELECTRIC FREQUENCY (Hz)	ELECTRIC POWER (kW)	OPERATING TEMPERATURE (°C)	BAKING SURFACE (material)
BASIC 4	1	50	230/400	50/60	4,8	50 ÷ 450	Refractory stone
BASIC 44	2	91			9,6		

TAB.2 *(Technical data)*

3.4- DESTINATION OF USE

The foreseen use for which this oven has been designed and produced is the following one:

FORESEEN USE: PIZZA BAKING, GRATINATING OF GASTRONOMY PRODUCTS AND HEATING OF FOODSTUFF IN BAKING PANS.

THE OVEN CAN BE USED EXCLUSIVELY BY AN AUTHORIZED OPERATOR (USER).

3.5- LIMITS OF USE

This oven has been designed and manufactured exclusively for the destination of use described in **Par. 3.4**, therefore, any other type of use is strictly forbidden in order to assure, at any time, the safety of the authorized operators, as well as the efficiency of the oven itself.

4.1- TRANSPORT AND LIFTING

DURING THE LIFTING AND HANDLING PROCEDURES OF THE OVEN, MAKE SURE THAT WITHIN THE RANGE OF ACTION THERE ARE NO PEOPLE, ANIMALS OR THINGS WHOSE SAFETY MAY BE ACCIDENTALLY ENDANGERED.

COMPULSORY USE LIFTING AND HANDLING MEANS AND SYSTEMS SUITABLE AND PROPER FOR THE WEIGHT AND THE SIZE OF THE OVEN (SEE PAR. 3.2 - 3.3).

SHOULD A FORK LIFT TRUCK BE USED TO PERFORM THE LIFTING AND HANDLING PROCEDURE, MAKE SURE TO POSITION THE FORKS PROPERLY AVOIDING ABSOLUTELY TO BUMP INTO THE LOAD (FIG. 4).

DURING THE LIFTING AND HANDLING OF THE OVEN, IT IS STRICTLY FORBIDDEN TO PERFORM SUDDEN BRAKINGS, ACCELERATIONS AND/OR SUDDEN DIRECTION CHANGES.

UPON DELIVERY CHECK THAT THE OVEN HAS NOT UNDERGONE DAMAGES DURING TRANSPORT. SHOULD THIS BE THE CASE, INFORM THE CARRIER OF THE DAMAGE IMMEDIATELY BY WRITING A NOTE ON THE TRANSPORT DOCUMENT. MOREOVER, VERIFY THAT THE SUPPLIED ACCESSORIES , AS WELL AS EVENTUAL OPTIONAL ITEMS REQUIRED HAVE ALL BEEN DELIVERED. ANY EVENTUAL COMPLAINT MUST BE SUBMITTED IN WRITTEN FROM YOUR DEALER TO THE MANUFACTURER BY AND NOT LATER THAN 8 (EIGHT) DAYS.

To ease the transport and the loading and unloading procedures, the oven is packaged in a cardboard box on a wooden basement of pallet type and it is fastened using straps. Moreover, the oven is coated by a transparent nylon coating. Once the transport and lifting procedures have been performed and after having located the oven in the proper working position, unpack the oven by cutting the straps, the cardboard box and the nylon coating.

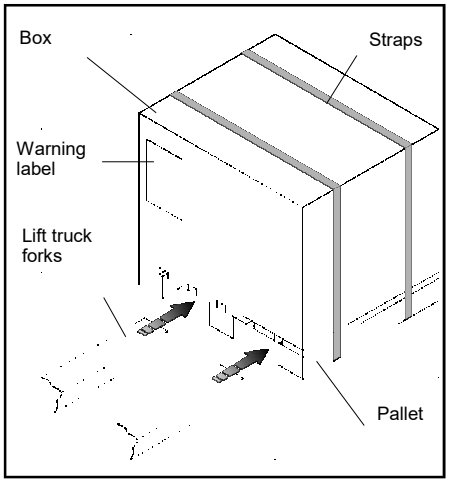

FIG.4 *(Insertion of the lift truck forks)*

4.2- INSTRUCTION SHEET APPLIED ON THE PACKAGE

Externally on the package, it is applied an instruction sheet for the handling of the same.
(See Chap. 12 - ENCLOSURES).

4.3- POSITIONING

ALL OVEN INSTALLATION PROCEDURES (POSITIONING AND ELECTRIC CONNECTION) MUST BE COMPULSORILY AND EXCLUSIVELY PERFORMED BY AUTHORIZED PERSONNEL SATISFYING THE TECHNICAL AND PROFESSIONALS REQUIREMENTS STATED, IN FULL COMPLIANCE WITH THE REGULATIONS IN FORCE IN THE COUNTRY OF USE OF THE OVEN.

The positioning of the oven must be performed observing the minimum dimensions (mm) quoted in **FIG. 5**. It must lean on a suitable support surface capable to sustain its weight and heat.
It is suggested to leave the right side of the oven free, in order to ease the disassembling of the covering panel in case of maintenance.

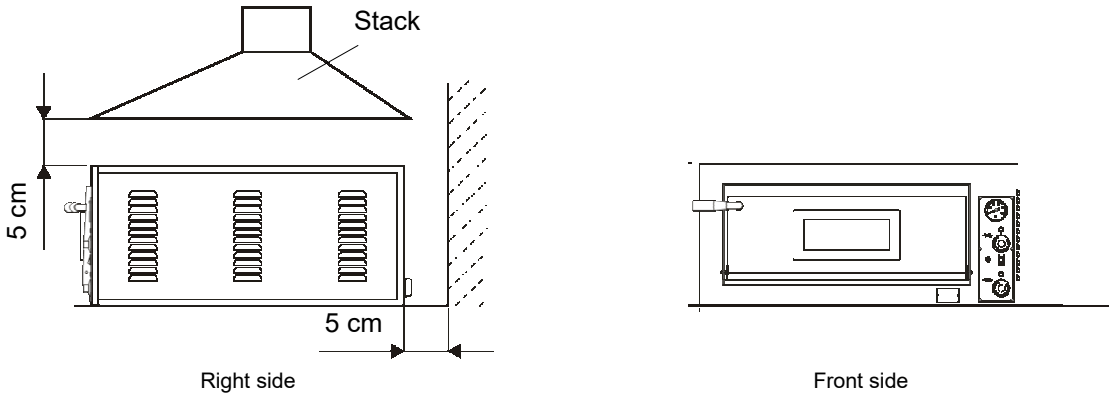

FIG.5 *(Positioning)*

5- INSTALLATION

5.1- CONNECTION TO THE STACK

The baking of the pizza does not produce a great quantity of vapor, but it is suggested to use a stack. If the stack is by forced suction, it must never be in direct contact with the oven and the minimum dimension given in **FIG. 5** must be observed.
The ovens are supplied with a discharge of the vapor emission that can be connected to a pipe for the discharging of the vapor smokes towards the outside. The pipe must be made in a proper material and have a suitable section, as well as a short upward path without narrowing or sudden path changes.

WITH THE VAPOR DISCHARGE CONNECTED TO A PIPE, NEVER USE A FORCED SUCTION SINCE THE HOT AIR CONTAINED IN THE BACKING CHAMBER WOULD BE EMPTIED TOO RAPIDLY BOTH WITH CLOSED AND WITH OPEN DOOR COMPROMISING THE BAKING TIME AND INCREASING SIGNIFICANTLY THE ELECTRIC POWER CONSUMPTION.

5.2- ELECTRIC CONNECTION

The oven is supplied with a power supply cable located on the rear and without plug **(FIG. 6 - Ref. 1).**
The electric data are given on the CE marking plate (FIG.1).

THE ELECTRIC CONNECTION OF THE OVEN TO THE MAINS MUST BE COMPULSORILY AND EXCLUSIVELY PERFORMED BY AN AUTHORIZED TECHNICIAN (ELECTRICIAN) SATISFYING THE TECHNICAL AND PROFESSIONAL REQUIREMENTS STATED BY THE REGULATIONS IN FORCE IN THE COUNTRY OF USE OF THE OVEN, WHO MUST ISSUE A DECLARATION OF CONFORMITY FOR THE INTERVENTION PERFORMED.

THE MANUFACTURER DECLINES ALL LIABILITIES FOR DAMAGES TO PEOLPLE, ANIMALS, AND THINGS CAUSED BY WRONG CONNECTIONS TO THE MAINS.

The connection to the mains must be performed by interposing an **automatic or manual switch having a suitable capacity** in which the opening distance between the contacts is at least 3 mm.
The grounding cable must not be interrupted.
The power supply voltage with operating oven must not differ from the value of rated voltage of +/- 10 %.
It is compulsory to connect the device to the ground.
The wiring diagram of the oven can be found in **Chap. 11**.

ONCE THE ELECTRIC CONNECTION HAS BEEN PERFORMED, THE AUTHORIZED TECHNICIAN (ELECTRICIAN) MUST ISSUE A DECLARATION CERTIFYING THE MEASUREMENT OF THE CONTINUITY OF THE EQUIPOTENTIAL PROTECTION CIRCUIT.

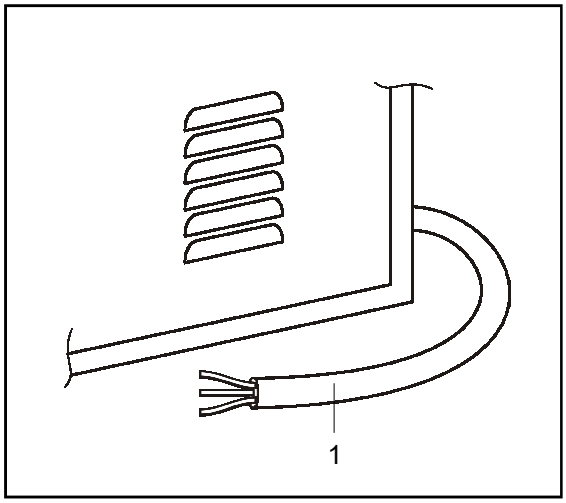

FIG.6 *(Power supply cable)*

6.1- REFERENCE DIRECTIVES AND STANDARDS

The involved machine has been designed and manufactured considering the evaluations obtained by a careful risk analysis and trying to reach, considering the current status of the technique, the objectives preset by the essential safety and health requirements foreseen by the "**New Approach Directive"**. **TAB.4** lists the EEC Directives, the Harmonized Standards (EN) to which reference is made herein:

2006/35/EEC	"Low voltage directive "
2004/30/EEC	"Electromagnetic compatibility "
EN 60204-1: 2010	"Safety of machinery. Electric equipment of the machine".
EN ISO 12100-1-2: 2016	"Basic concepts for the safety of the machines and main principles for the design".

TAB.4 *(Reference directives and standards)*

6.2- PERSONAL PROTECTION EQUIPMENT (PPE)

IT IS COMPULSORY FOR THE AUTHORIZED OPERATORS USE PROTECTIVE GLOVES AGAINST HEAT, AS WELL AS EVENTUAL PROTECTIVE CLOTHING TO PROTECT THE BODY DURING THE INSERTION AND THE EXTRACTION OF THE BACKING PANS.

6.3- RESIDUAL RISKS

BURNING HAZARD: accidental contact with oven parts at high temperature (external: oven door and front panel; internal: oven door, baking chamber and crown resistor), as well as with the backing pans and the baked foodstuff: when the backing pans are inserted and extracted and/or when the authorized operators decide to perform a wrong, forbidden and not reasonably foreseeable actions.

7.1- CONTROL PANEL

The control panel is installed on the front side of the oven and changes according to the models as shown in **FIG. 7.**

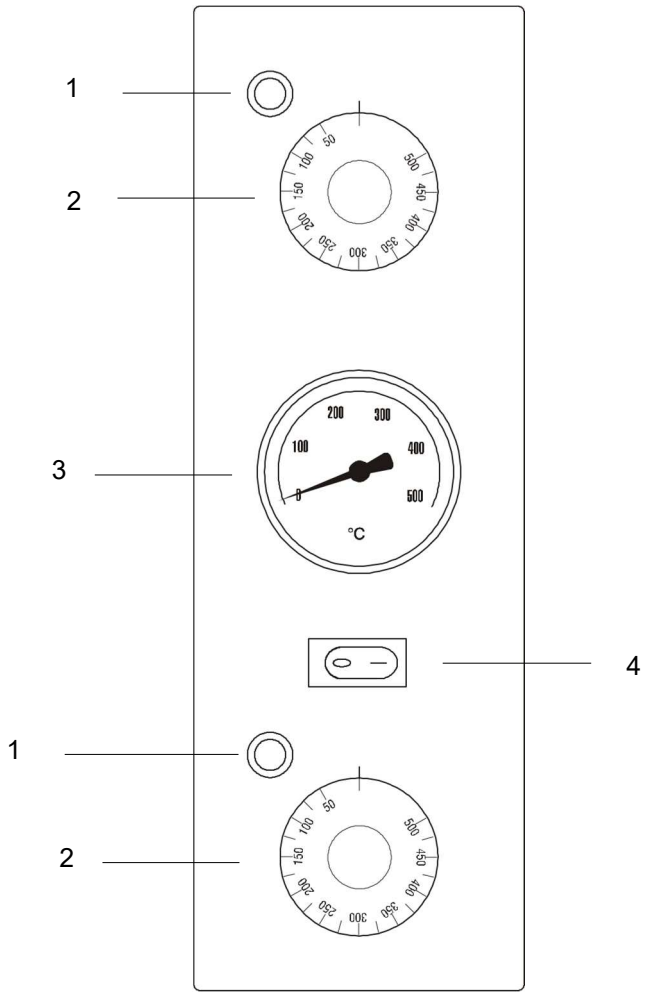

FIG.7 *(Control panel)*

LEGEND FIG.7		
REF.	**DENOMINATION**	**FUNCTION**
1	Green warning light	If lighted, it signals the operation of the resistor in use.
2	Thermostat	• **Pos.0:** it disables the operation of the resistor (in the models without resistor switch); • **Pos.50 ÷ 450 °C:** It enables the operation of the resistor and sets the wished temperature.
3	Thermometer	Indicates the temperature in the baking chamber.
4	Chamber lamp switch (I-0)	• **Pos. I:** It switches on the light in the oven chamber; • **Pos. 0:** It switches off the light in the oven chamber.

7.2– FIRST COMMISSIONING

The first commissioning must be performed proceeding as follows:

ONLY THE OPERATORS WHO ARE CHARGED WITH THE USE AND THE MAINTENANCE CAN PERFORM THE FIRST COMMISSIONING, THE TURNING ON AND THE MAINTENANCE OF THE OVEN.

THE COMMISSIONING OF THE OVEN CAN BE PERFORMED ONLY WHEN THE INSTALLATION HAS BEEN COMPLETED AND THE AUTHORIZED TECHNICIANS HAVE ISSUED THE DECLARATION OF CONFORMITY FOR THE ELECTRIC CONNECTION.

1) Clean the front part of the oven with a clean and soft cloth in order to remove any eventual residues;
2) Connect the plug of the power supply cable to the power supply outlet;
2) Set the cutout switch of the disconnecting device on **pos."I"**;
3) Enable the operation of the resistors setting the thermostats **(FIG. 7-Ref. 2)** on the temperature of **150 °C** indicated on the handle. The related green warning lights signaling the operation of the resistors in use switch on;
4) Let the oven operate for about **1 h**;
5) Disable the operation of the resistors, bringing the thermostats **(FIG. 7-Ref. 2)** to **pos. "0"**;
The related green warning lights will switch off;
6) Open the door of the oven for about **15 min** in order to let eventual vapors and smells be discharged;
7) Close the door again and repeat the operation described at point **3)** bringing the thermostats **(FIG. 7 -Ref. 2)** at the temperature of **400 °C** indicated on the knob;
8) Let the oven work for about **1 h**;
9) Disable the operation of the resistors bringing the thermostats **(FIG. 7-Ref. 2) to pos. "0"**;
The green warning lights will switch off;
10) Turn off the oven as described in **par. 7.4.**

7.3- TURNING ON OF THE OVEN

1) Connect the plug of the power supply cable to the power supply outlet;
2) Bring the cutout switch of the sectioning device to **pos. "I"**;
3) Enable the operation of the resistors bringing the thermostats **(FIG. 7-Ref. 2)** to the wished temperature indicated on the handle. The related warning lights signaling the operation of the resistors in use will switch on;
4) Once the oven has reached the wished temperature (see point **9)** of this paragraph), visible on the thermometer **(FIG. 7-Ref. 4),** it is possible to insert the pizza in the oven for the backing;
5) Open the oven door **(FIG. 3-Ref. 3)** manually using the suitable handles **(FIG. 3-Ref. 1);**
6) To light the inside part of the backing chamber, press the oven lamp switch **(FIG. 7-Ref. 5);**
7) Insert in the oven the pizza and/or the pizzas to be backed using suitable devices for this aim. It is important to avoid to leave the door open for too long, since the outgoing heat lowers the temperature of the oven.
8) Close the door again and check the backing through the inspection glass **(FIG. 3-Ref. 4);**
9) The baking temperature of the pizza varies if it is positioned directly on the refractory stone or on a baking pan. In the first case, it is suggested to set the backing temperature at **280 °C** for the bottom and **320 ° C** for the crown; on the contrary, in the second case, set **320 °C** for the bottom and **280 °C** for the crown;
10) When the baking has ended, open the door and extract the pizza and/or the pizzas and close the door again.

7.4- TURNING OFF OF THE OVEN

Once the use of the oven has ended, proceed as follows:

1) Turn off the oven, bringing the thermostats **(FIG. 7-Ref. 2)** and the resistor **(FIG. 7-Ref. 3)** switches to **pos."0"**;

THE SELECTION OF THE IDEAL TEMPERATURES FOR THE BAKING AND THE RELATED ADJUSTMENTS OF THE RESISTORS OF CROWN AND BOTTOM DEPEND EXCLUSIVELY ON THE EXPERIENCE OF THE OPERATOR IN CHARGE.

2) Bring the cutout switch of the sectioning device to **pos."0";**

3) Disconnect the plug of the power supply cable **(FIG. 2-Ref. 4)** from the power supply outlet.

8.1– ROUTINE MAINTENANCE

The routine maintenance includes all checks and interventions that the operator in charge must perform, according to the frequency and modes set, to assure the efficiency and safety degree of the oven in time.

BEFORE PERFORMING ANY TYPE OF ROUTINE AND/OR SUPPLEMENTARY MAINTENANCE INTERVENTION, IT IS COMPULSORY TO DISCONNECT THE PLUG OF THE OVEN FROM THE POWER SUPPLY OUTLET.

1) Cleaning of the refractory surface: this operation has to be performed with hot oven.
Once the **temperature of about 350°C has been reached**, turn off the oven, open the door and clean the surface using a **brush in vegetable fiber equipped with a long handle in order to avoid the contact with the oven hot parts**.

2) External cleaning of the oven (surfaces in stainless steel, inspection glass and control panel): this operation has to be performed with cold oven.

IT IS RECOMMENDED TO THE OPERATOR IN CHARGE TO USE PROPER GLOVES AND SUITABLE CLOTHING TO AVOID BURNINGS.

8.2– SUPPLEMENTARY MAINTENANCE

For any intervention of supplementary maintenance, repairing and/or replacement refer exclusively to the authorized dealer where the oven has been purchased and/or to an authorized technician satisfying the technical and professional requirements stated by the regulations in force.

8- MAINTENANCE

ELECTRIC MAINTENANCE

The eventual interventions are necessary only in case of failure of the electric components.

All electric components can be reached on the right side of the oven, removing the panel with the aeration openings.

REPLACEMENT OF THE CHAMBER LIGHT LAMP

1) From the inner chamber unscrew the round shaped glass ;

2) Extract the lamp;

3) Replace it with a lamp having technical features equal to the original one;

4) Re-screw the round shaped glass.

9- DEMOLITION

9.1- GENERAL WARNINGS

When dismantling the oven, compulsorily observe the provisions of the regulations in force. Differentiate the parts making up the oven according to different types of construction materials (plastic, copper, iron, etc.).

10- SPARE PARTS

IT IS ABSOLUTELY FORBIDDEN TO USE NON ORIGINAL SPARE PARTS. ORIGINAL SPARE PARTS MUST BE REQUIRED EXCLUSIVELY TO THE MANUFACTURER

FOR THE SPARE PARTS OF THE ELECTRIC EQUIPMENT, REFER TO THE COMPONENTS DESCRIBED IN PAR. 11.1 – LIST OF ELECTRIC EQUIPMENT.

TAV. 1			MOD. BASIC 4
Rif.	**Q.tà**	**Denominazione**	
1	**1**	Left stirrup for oven's door	
2	**1**	Door glass	
3	**1**	Right stirrup for oven's door	
4	**1**	Grip of handle in thermoplastic material	
5	**2**	Gasket for door glass	
6	**1**	Door frame	
7	**1**	Façade	
8	**2**	Refractory stone 350X699X14	
9	**1**	Vapor chimney	
10	**1**	Cooking room	
11			
12	**1**	Left panel	
13	**5**	Termoinsulating material	
14	**1**	External sheating	
15	**1**	Terminal board support	
16	**1**	Terminal board	
17	**1**	Washer	
18	**1**	Glass for chamber light (round-shaped glass)	
19	**1**	Lamp	
20	**1**	Lamp holder	
21	**1**	Chamber light kit	
22	**1**	Command panel	
23	**1**	Room light switch	
24	**4**	Screws for door	
25	**1**	Right panel with ventilation holes	
26			
27	**2**	Armored resistances	
28	**1**	Inner door	
29	**1**	External door	
30	**2**	Thermostat	
31	**1**	Thermometer	
32	**2**	Light to signal resistances in use	
33	**2**	Knob to adjust thermostat	

TAV.1	MOD. BASIC 4

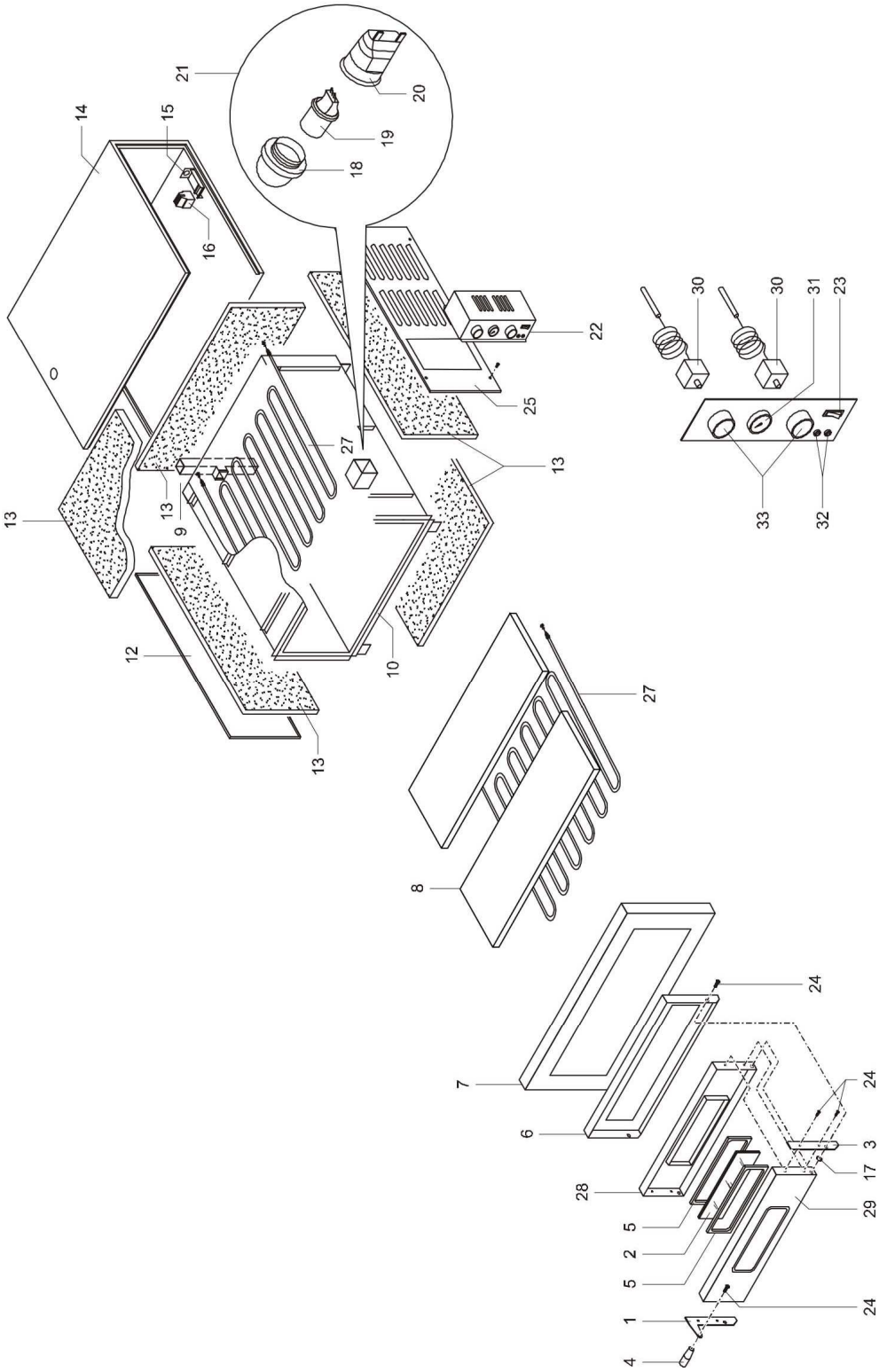

TAB. 2			MOD. BASIC 44
Rif.	**Q.tà**	**Denominazione**	
1	**2**	Left stirrup for oven's door	
2	**2**	Door glass	
3	**2**	Right stirrup for oven's door	
4	**2**	Grip of handle in thermoplastic material	
5	**4**	Gasket for door glass	
6	**2**	Door frame	
7	**1**	Façade	
8	**4**	Refractory stone 350X699X14	
9	**1**	Vapor chimney	
10	**2**	Cooking room	
11			
12	**1**	Left panel	
13	**5**	Termoinsulating material	
14	**1**	External sheating	
15	**1**	Terminal board support	
16	**1**	Terminal board	
17	**2**	Washer	
18	**2**	Glass for chamber light	
19	**2**	Lamp	
20	**2**	Lamp holder	
21	**2**	Chamber light kit	
22	**1**	Command panel	
23	**1**	Room light switch	
24	**8**	Screws for door	
25	**1**	Right panel with ventilation holes	
26			
27	**4**	Armored resistances	
28	**2**	Inner door	
29	**2**	External door	
30	**4**	Thermostat	
31	**2**	Thermometer	
32	**4**	Light to signal resistances in use	
33	**4**	Knob to adjust thermostat	

TAV.2	MOD. BASIC 44

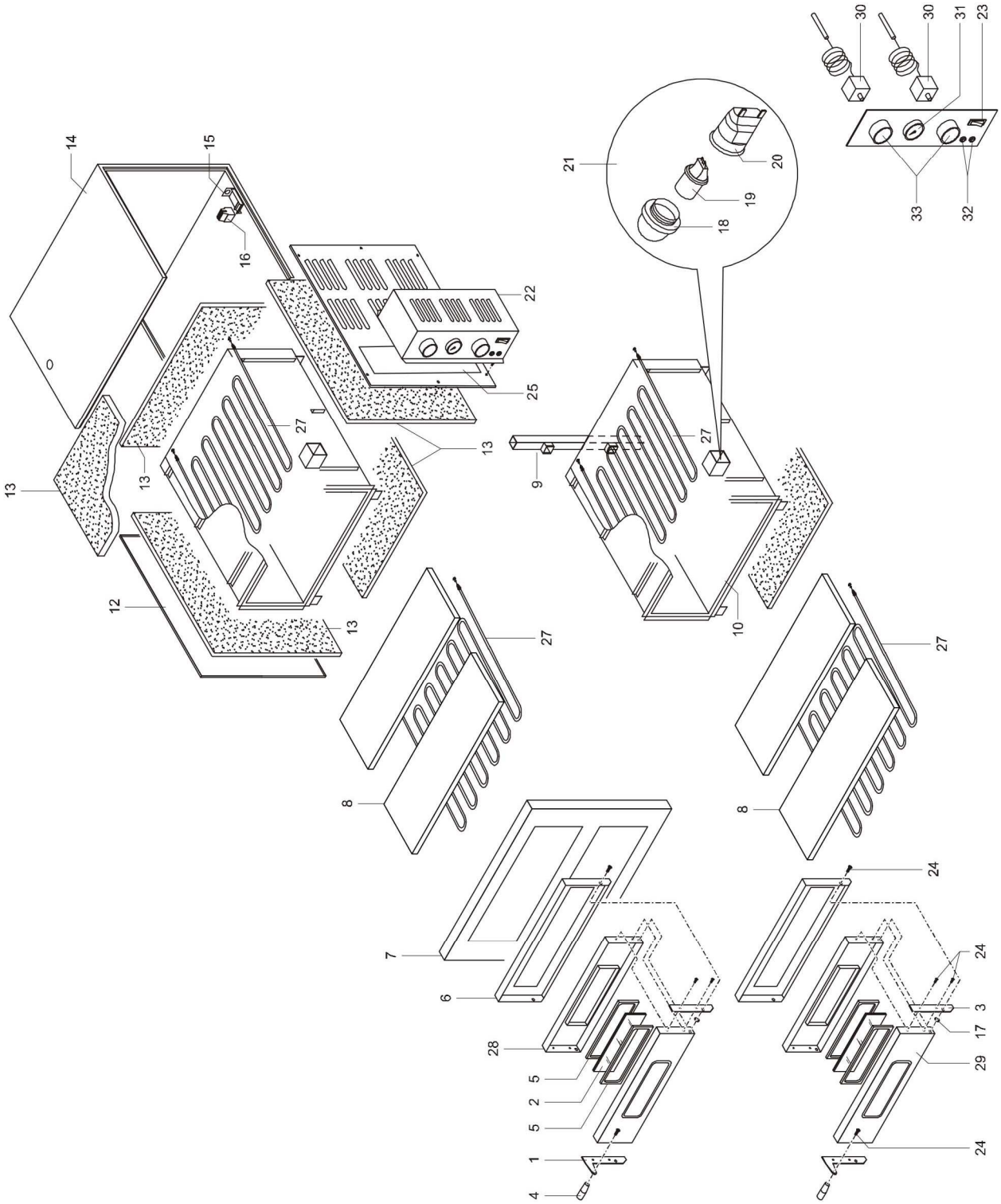

WIRING DIAGRAMS AND COMPONENTS

MARK	DESCRIPTION
ILC	Room light switch
LC	Room light
TP	Base thermostat
TC	Ceiling thermostat
LSP	Base light
LSC	Ceiling light
RP	Base resistance
RC	Ceiling resistance
PE	Equipotential inlet

WIRING DIAGRAMS	MOD. BASIC 4

400 V/3

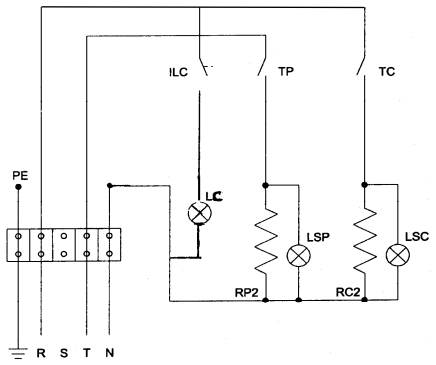

230 V/3

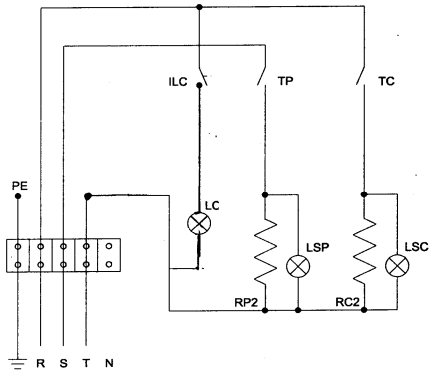

230 V/1

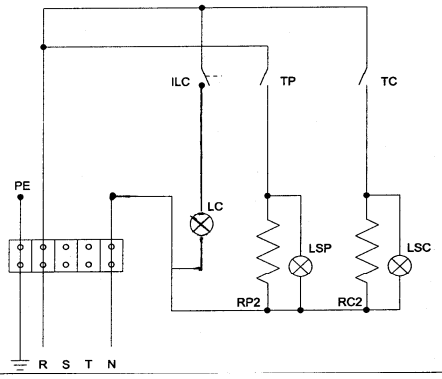

WIRING DIAGRAMS	MOD. BASIC 44

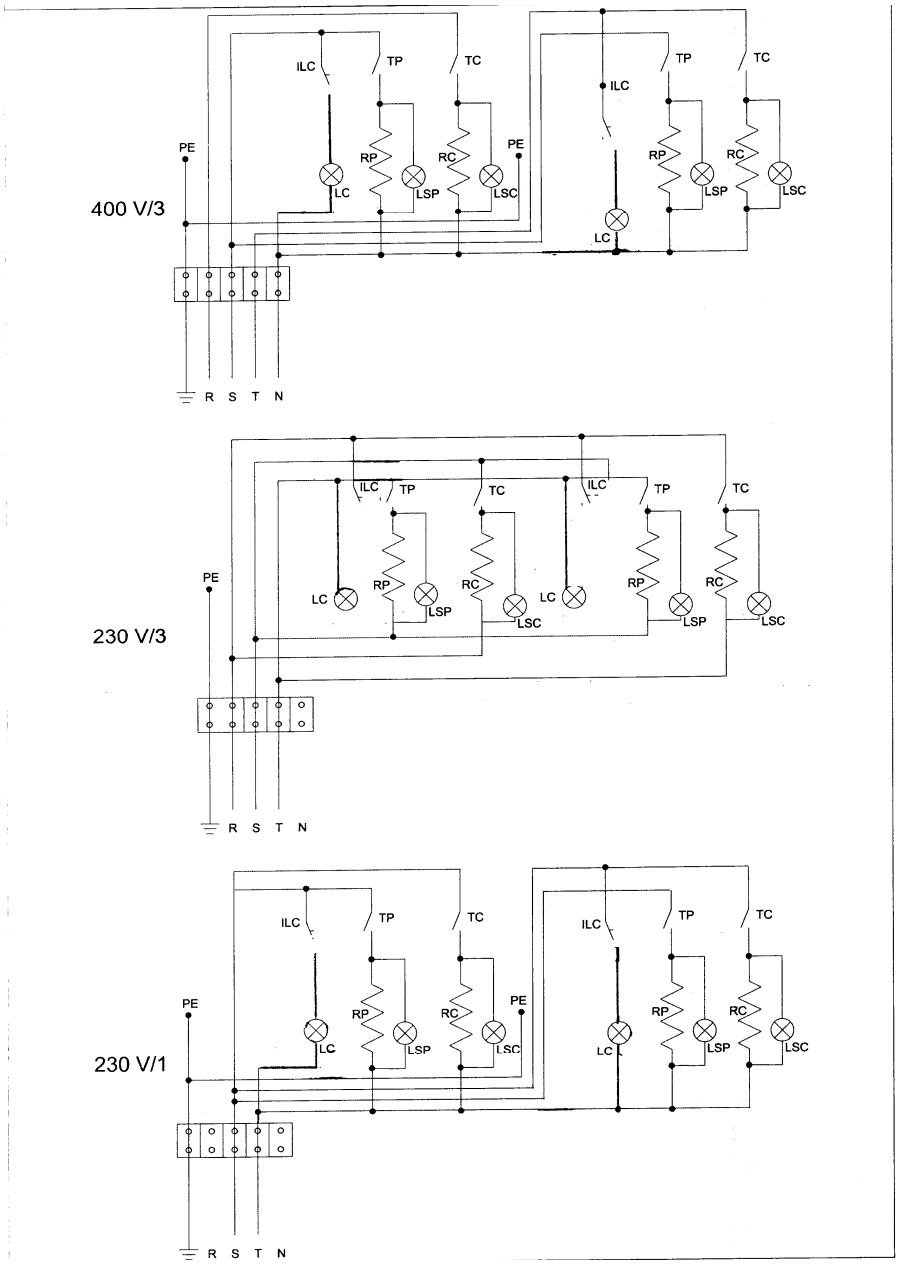

12.1- LIFTING INSTRUCTION SHEET APPLIED TO THE PACKAGE

It is made of an adhesive sheet size A4 (210 x 297 mm) print b/w (Water resistant), applied externally to the carton box of the package **(FIG.8)**.

ISTRUZIONI PER IL SOLLEVAMENTO E LA MOVIMENTAZIONE / *INSTRUCTIONS FOR LIFTING AND HANDLING*
INSTRUCTIONS POUR LE LEVAGE ET LE MOUVEMENT / ANWEISUNGEN ZUM ANHEBEN UND ZUM HANDLING
INSTRUCCIONES PARA EL LEVANTAMIENTO Y EL MOVIMIENTO

PESO - *WEIGHT*
GESAMTGEWICHT
PESO - *POIDS*
Kg

ITALIANO

PRIMA DI ESEGUIRE IL SOLLEVAMENTO E LA MOVIMENTAZIONE DELL'IMBALLO, IL PERSONALE ADDETTO DEVE OBBLIGATORIAMENTE LEGGERE E COMPRENDERE IN TUTTE LE PARTI LE SEGUENTI ISTRUZIONI. È OBBLIGATORIO ASSICURARSI CHE DURANTE LE OPERAZIONI, NEL RAGGIO D'AZIONE NON VI SIANO PERSONE, ANIMALI E/O COSE LA CUI INCOLUMITÀ ACCIDENTALMENTE POSSA ESSERE COMPROMESSA.

MOVIMENTAZIONE IMBALLO CON CARRELLO ELEVATORE

È OBBLIGATORIO CHE L'OPERATORE ADDETTO ALL'UTILIZZO DEL CARRELLO ELEVATORE SIA AUTORIZZATO ALLA CONDUZIONE DELLO STESSO. L'IMBALLO DEVE ESSERE MOVIMENTATO OBBLIGATORIAMENTE CON UN MULETTO DOTATO ALL'IMPIEGO E ALLA PORTATA E CONFORME ALLE NORMATIVE VIGENTI. LE OPERAZIONI DI MOVIMENTAZIONE DEVONO ESSERE ESEGUITE CON LA MASSIMA ATTENZIONE, EVITANDO BRUSCHE MANOVRE E ACCELERAZIONI. UNA VOLTA POSIZIONATO L'IMBALLO A TERRA SU UNA SUPERFICIE PIANA CHE NE ASSICURI LA STABILITÀ, PROCEDERE ALLO SBALLAGGIO DELLA MACCHINA. È OBBLIGATORIO ATTENERSI RIGOROSAMENTE ALLE INDICAZIONI RIPORTATE NELLE ISTRUZIONI PER L'USO E MANUTENZIONE (CAP.4).

SOLLEVAMENTO DELLA MACCHINA CON GRU

È OBBLIGATORIO ATTENERSI RIGOROSAMENTE ALLE INDICAZIONI RIPORTATE NELLE ISTRUZIONI PER L'USO E MANUTENZIONE (CAP.4).

IL FABBRICANTE, DECLINA OGNI RESPONSABILITÀ PER EVENTUALI DANNI CAUSATI A PERSONE, ANIMALI O COSE, DERIVANTI DALL'INOSSERVANZA DELLE ISTRUZIONI RIPORTATE NEL MANUALE PRESENTE NELLE ISTRUZIONI PER L'USO.

ENGLISH

BEFORE PERFORMING THE LIFTING AND HANDLING OF THE PACKAGING, THE PERSONNEL IN CHARGE IS OBLIGED TO READ AND FULLY UNDERSTAND THE FOLLOWING INSTRUCTIONS. IT IS COMPULSORY TO MAKE SURE THAT DURING THE OPERATIONS, IN THE OPERATING AREA THERE ARE NO PERSONS, ANIMALS AND/OR THINGS WHOSE SAFETY COULD BE COMPROMISED.

HANDLING OF THE PACKAGING TO BE MADE WITH FORK LIFT

IT IS COMPULSORY FOR THE OPERATOR USING THE FORK LIFT TO BE AUTHORIZED TO DRIVE THE SAME. IT IS COMPULSORY FOR THE PACKAGING TO BE HANDLED WITH A SUITABLE FORK LIFT FOR USE AND CAPACITY AND COMPLYING WITH THE STANDARDS IN FORCE. THE HANDLING OPERATIONS MUST BE PERFORMED WITH MAXIMUM CARE, AVOIDING SUDDEN MANEUVERS AND ACCELERATIONS. ONCE LOCATED THE PACKAGING ON THE GROUND, ON A FLAT SURFACE ENSURING THE STABILITY, PROCEED WITH THE MACHINE UNPACKING. IT IS COMPULSORY TO STRICTLY FOLLOW THE INSTRUCTIONS INDICATED IN THE "INSTRUCTION FOR USE AND MAINTENANCE (CAP.4).

MACHINE LIFTING WITH CRANE

IT IS COMPULSORY TO STRICTLY FOLLOW THE INSTRUCTIONS INDICATED IN THE "INSTRUCTION FOR USE AND MAINTENANCE (CAP.4).

THE MANUFACTURER HAS NO LIABILITY FOR ANY DAMAGE CAUSED TO PEOPLE, ANIMALS OR THINGS DUE TO THE NONOBSERVANCE OF THE INSTRUCTIONS REPORTED IN THE PRESENT MANUAL AND IN THE INSTRUCTIONS FOR USE.

DEUTSCH

BEVOR DIE VERPACKUNG ANGEHOBEN UND BEWEGT WIRD, MUSS DAS BEFUGTE PERSONAL OBLIGATORISCH FOLGENDE ANWEISUNGEN LESEN UND VERSTEHEN. ES IST OBLIGATORISCH, SICH ZU VERSICHERN, DASS WÄHREND DER MONTAGE KEINE PERSONEN, TIERE UND / ODER DINGE IM AKTIONSBEREICH ANWESEND SIND, IHRE UNVERLETZLICHKEIT KÖNNTE ZUFÄLLIG BEFÄHRDET WERDEN.

BEWEGUNG DER VERPACKUNG MIT HUBSTAPLER

EINGEWICKELT ES IST OBLIGATORISCH, DASS DER ZUM VERWENDUNG DES HUBSTAPLERS ZUSTÄNDIGE BEDIENER, ZUR STEUERUNG DESSELBEN BEFUGT IST. DIE VERPACKUNG MUSS OBLIGATORISCH MIT EINEM ZU DIESEM ZWECK UND ZU DIESER TRAGFÄHIGKEIT GEEIGNETEN GABELSTAPLER BEWEGT WERDEN. DER GABELSTAPLER MUSS VORSCHRIFTMÄSSIG SEIN. DIE BEWEGUNGSOPERATIONEN MÜSSEN MIT DER HÖCHSTEN VORSICHT DURCHGEFÜHRT WERDEN, INDEM SCHROFFE BEWEGUNGEN UND BESCHLEUNIGUNGEN VERMIEDEN WERDEN. MAN MUSS SICH AUSSERDEM VERSICHERN, NACHDEM DIE VERPACKUNG AUF EINER FLACHEN EBENE LIEGT, DIE IHRE STABILITÄT GEWÄHLEISTET, DIE MASCHINE. ES IST OBLIGATORISCH, DIE ANWEISUNGEN IN DER GEBRAUCHS- UND WARTUNGSANWEISUNGEN ZU BEFOLGEN (KAP.4).

ANHEBUNG DER MASCHINE MITTELS KRAN

ES IST OBLIGATORISCH, DIE ANWEISUNGEN IN DER GEBRAUCHS- UND WARTUNGSANWEISUNGEN ZU BEFOLGEN (KAP.4).

DIE MASCHINE DARF NUR NACH DEN ANGABEN DIESER BETRIEBSANLEITUNG VERWENDET WERDEN. EINE ANDERE VERWENDUNG GILT ALS NICHT BESTIMMUNGSGEMÄß UND KANN ZU PERSONEN-,TIERE- ODER SACHSCHÄDEN FÜHREN, FÜR DIE DER HERSTELLER ALLE VERANTWORTUNG ABLEHNT.

ESPAÑOL

ANTES DE REALIZAR EL LEVANTAMIENTO Y EL MOVIMIENTO DEL EMBALAJE, EL PERSONAL ENCARGADO DEBE OBLIGATORIAMENTE LEER Y COMPRENDER EN TODAS SUS PARTES LAS SIGUIENTES INSTRUCCIONES. ES OBLIGATORIO ASEGURARSE QUE DURANTE LAS OPERACIONES, EN EL RAYO DE ACCIÓN NO HAYAN PERSONAS, ANIMALES Y/O COSAS CUYA INCOLUMNIDAD ACCIDENTALMENTE PUEDA SER COMPROMETIDA.

MOVIMIENTO EMBALAJE CON CARRITO LEVANTADOR

ES OBLIGATORIO QUE EL OPERADOR ENCARGADO AL EMPLEO DEL CARRITO LEVANTADOR SEA AUTORIZADO A CONDUCIR EL MISMO. EL EMBALAJE DEBE SER PUESTO EN MOVIMIENTO OBLIGATORIAMENTE CON UN CARRITO ADECUADO AL EMPLEO Y CAPACIDAD Y CONFORME A LAS NORMAS EN VIGOR. LAS OPERACIONES DE MOVIMIENTO DEBEN SER REALIZADAS CON EL MAXIMO CUIDADO, EVITANDO MANIOBRAS Y ACCELERACIONES. UNA VEZ POSICIONADO EL EMBALAJE EN EL PISO EN UNA SUPERFICIE LLANA QUE ASEGURE SU ESTABILIDAD, PROCEDER AL DESEMBALAJE DE LA MAQUINA. ES OBLIGATORIO SEGUIR CUIDADOSAMENTE LAS INDICACIONES DE LAS "INSTRUCCIONES PARA EL EMPLEO Y MANTENIMIENTO" (CAP.4).

LEVANTAMIENTO DE LA MÁQUINA CON GRUA

ES OBLIGATORIO SEGUIR CUIDADOSAMENTE LAS INDICACIONES DE LAS "INSTRUCCIONES PARA EL EMPLEO Y MANTENIMIENTO" (CAP.4).

EL FABRICANTE ES LIBRE DE TODA RESPONSABILIDAD POR EVENTUALES DAÑOS CAUSADOS A PERSONAS, ANIMALES O COSAS DERIVANTES DE LA NO OBSERVANCIA DE LAS INSTRUCCIONES INDICADAS EN ESTA HOJA Y EN LAS INSTRUCCIONES PARA EL EMPLEO.

FRANÇAIS

AVANT DE REALISER LE LEVAGE ET LE MOUVEMENT DE L'EMBALLAGE, LE PERSONNEL PREPOSE DOIT OBLIGATOIREMENT LIRE ET COMPRENDRE LES INSTRUCTIONS SUIVANTES. IL EST OBLIGATOIRE DE S'ASSURER QUE PENDANT LES OPERATIONS, DANS LE RAYON D'ACTION IL N'Y A PAS DE PERSONNES, ANIMAUX ET/OU CHOSES DONT L'INCOLUMITE' PEUT ETRE COMPROMISE.

MOUVEMENT DE L'EMBALLAGE AVEC CHARRIOT ELEVATEUR

IL EST OBLIGATOIRE POUR L'OPERATEUR DU CHARRIOT ELEVATEUR D'ETRE AUTORISE' A' LA GESTION DU MEME. L'EMBALLAGE DOIT ETRE MIS EN MOUVEMENT OBLIGATOIREMENT PAR UN CHARRIOT ELEVATEUR APPROPRIE' POUR L'EMPLOI ET LA CAPACITE' ET CONFORME AUX NORMES EN VIGUEUR. LES OPERATIONS DE MOUVEMENT DOIVENT ETRE REALISEES AVEC LE MAXIMUM D'ATTENTION, EN EVITANT DE SOUDAINES MANEUVRES ET ACCELERATIONS. UNE FOIS POSITIONNE' L'EMBALLAGE A' TERRE SUR UNE SURFACE PLANE QUI EN ASSURE SA STABILITE', IL FAUT PASSER AU DESEMBALLAGE DE LA MACHINE.
IL EST STRICTEMENT OBLIGATOIRE DE SUIVRE LES INDICATIONS DES "INSTRUCTIONS POUR L'EMPLOI ET L'ENTRETIEN" (CAP.4).

LEVAGE DE LA MACHINE AVEC GRUE

IL EST STRICTEMENT OBLIGATOIRE DE SUIVRE LES INDICATIONE DES "INSTRUCTIONS POUR L'EMPLOI ET L'ENTRETIEN" (CAP.4).

LE FABRIQUANT EST LIBRE DE TOUTE RESPONSABILITE' POUR TOUT DOMMAGE CAUSE' A' PERSONNES, ANIMAUX OU CHOSES DERIVANT DE LA NON OBSERVANCE DES INSTRUCTIONS REPORTEES DANS LA PRESENTE NOTICE ET DANS LES INSTRUCTIONS POUR L'EMPLOI.

FIG.8 *(LIFTING INSTRUCTION SHEET APPLIED TO THE PACKAGE)*

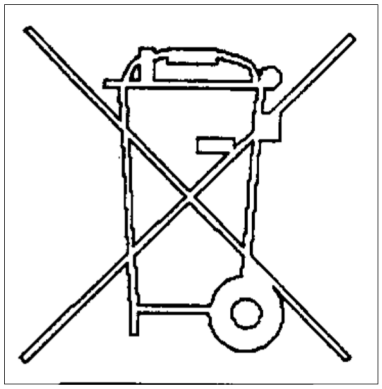

INFORMAZIONE AGLI UTENTI
Ai sensi dell'art.13 del Decreto Legislativo 25 luglio 2005, n.151 "Attuazione Direttive 2002/95/CE, 2002/96/CE e 2003/108/CE, relative alla riduzione dell'uso di sostanze pericolose nelle apparecchiature elettriche ed elettroniche, nonché allo smaltimento dei rifiuti".

Il simbolo del cassonetto barrato riportato sull'apparecchiatura o sulla sua confezione indica che il prodotto alla fine della propria vita utile deve essere raccolto separatamente dagli altri rifiuti.

La raccolta differenziata della presente apparecchiatura giunta a fine vita è organizzata e gestita dal produttore. L'utente che vorrà disfarsi della presente apparecchiatura dovrà quindi contattare il produttore e seguire il sistema che questo ha adottato per consentire la raccolta separata dell'apparecchiatura giunta a fine vita.

L'adeguata raccolta differenziata per l'avvio successivo dell'apparecchiatura dismessa al riciclaggio, al trattamento e allo smaltimento ambientale compatibile contribuisce ad evitare possibili effetti negativi sull'ambiente e sulla salute e favorisce il reimpiego e/o riciclo dei materiali di cui è composta l'apparecchiatura.
Lo smaltimento abusivo del prodotto da parte del detentore comporta l'applicazione delle sanzioni amministrative previste dalla normativa vigente.

INFORMATIVE REPORT TO THE CUSTOMERS
according to the art.13 of Decree Legislative 25 July 2005, n.151 "Performance Directives 2002/95/CE, 2002/96/CE and 2003/108/CE, relative to the reduction of the use of dangerous substances in the electronic and electrical equipment, let alone to disposal of the refusals".

The symbol of the crossed bin brought back on the equipment or its packing indicates that the product at the end of its own life cycle must be collected separately from the other refusals.

The differentiated collection of the present equipment at the end of its life cycle is organized and is managed from the producer. The customer who want to unravel itself the present equipment will have therefore to contact the producer and follow the system that he has adopted in order to concur the separate collection of the equipment at the end of its life cycle.

The adapted differentiated collection for the successive start of the cast-off equipment to the recycling, to the treatment and to the compatible with environment disposal contributes to avoid possible negative effects on the atmosphere and the health and favours the re-employment and/or the recycling of the materials of which the equipment is made.
Illicit disposal of the product by the holder involves the application of the previewed administrative endorsements from the enforced norm.