Installation, Operating and Servicing Instructions

Silverlink 600 Electric Fryers
DF33, DF36, DF39, DF46, DF49, DF66, DF66/ST, DF612, DF618, J6, J12, J9, J18

Please make a note of your product details for future use:

Date Purchased:_____

Model Number:_____

Serial Number:_____

Dealer:_____

_____

SILVERLINK 600

CONTENTS

Important Information	2
Warnings and Precautions	3
Technical Data	3
Checklist of Enclosures	4
Installation and Commissioning	4-6
Operating Instructions	7-9
Cleaning	10
Servicing, Maintenance and Component Replacement	10
Fault Finding	10
Spare Parts List	11
Accessories	11
Service Information and Guarantee	12

IMPORTANT INFORMATION



Read these instructions carefully before using this product, paying particular attention to all sections that carry warning symbols, caution symbols and notices. Ensure that these are understood at all times.



WARNING!
This symbol is used whenever there is a risk of personal injury.



CAUTION!
This symbol is used whenever there is a risk of damaging your Lincat product.



NOTE:
This symbol is used to provide additional information, hints and tips.

KEEP THIS MANUAL FOR FUTURE REFERENCE

WARNINGS AND PRECAUTIONS



This appliance must be installed, commissioned and serviced by a qualified person in accordance with national and local regulations in force in the country of installation.

If the supply cord is damaged, it must be replaced by the manufacturer, its service agent or similarly qualified person.

Ensure that the plug/socket is accessible at all times.

Strip plastic coating and clean the appliance before use.

During operation parts may become hot - avoid accidental contact.

Disconnect this appliance before servicing, maintenance or cleaning.

Do not move this appliance when the tank contains oil.

This unit is designed to be used with oils and fats in a liquid form.
Oils and fats that become solid at lower temperatures must be liquefied prior to dispensing into the fryer tank.
This instruction includes both filling from empty and topping up during use.

TECHNICAL DATA

Model	Height (mm)	Width (mm)	Depth (mm)	Weight (kg)
DF33	265 HOB 330 O/A	300	600	13
DF36		300	632	14
DF39		300	632	15
DF46		450	632	19
DF49		450	632	19
DF66		600	600	24
DF66/ST		600	632	22
DF612		600	632	25
DF618		600	632	27
J6	905-925 HOB 970 -990 O/A	300	632	25
J9		300	632	26
J12		600	632	43
J18		600	632	44

CHECK LIST OF ENCLOSURES

Warranty card
Instructions manual
Baskets
Lid knob
Element lifting hook
Feet (J models)
Terminal inlet cover (models over 3kW)
Stability Bracket (J6, J9)

INSTALLATION AND COMMISSIONING

This appliance must be earthed.



An equipotential bonding terminal is provided to allow cross bonding with other equipment.

If replacing the plug connect the terminals as follows:

Green and Yellow wire	Earth	E
Blue wire	Neutral	N
Brown wire	Live	L

Means of isolation with at least 3mm contact separation in all poles must be incorporated into the fixed wiring of this appliance.

The fixed wiring insulation must be protected by insulated sleeving having a temperature rating of at least 60 Deg C.

Supply cords shall be oil resistant, sheathed flexible cable not lighter than ordinary polychloroprene or equivalent elastomer sheathed cord (code 60245 IEC 57)

Install this appliance on a level surface ensuring all vents are unobstructed. Any partitions, walls or furniture must be of non-combustible material. Minimum distances A 100mm B 1000mm – see Fig 2.

Operate this appliance beneath an extraction canopy.

Models up to 3kW are fitted with a plug and lead. Models over 3kW must be installed by a qualified electrician.

Note: DF66 models must not be installed into a twin socket as the current will exceed the socket current rating. Use 2 separate single sockets.

When installing models over 3kW the terminal inlet cover supplied must be fitted during connection.

Power Ratings

Model	Power (kW)	Supply 1N~+E(A) 230V	Supply 3N~+E (A) 400V
DF33	3.0	13.0	N/A
DF36	6.0	26.0	L1 13 L2 13 L3 N/A
DF39	9.0	39.0	L1 13 L2 13 L3 13
DF46	6.0	26.0	L1 13 l2 13 l3 N/A
DF49	9.0	39.0	L1 13 L2 13 L3 13
DF66	6.0 (2x3)	2 x 13.0	N/A
DF66/ST	6.0	26.0	L1 13 L2 13 L3 N/A
DF612	12.0 (2x6)	2 x 26.0	2 x L1 13 2 x L2 13 2 x L3 N/A
DF618	18.0 (2x9)	2 x 39.0	2 x L1 13 2 x L2 13 2 x L3 13
J6	6.0	26.0	L1 13 L2 13 L3 N/A
J9	9.0	39.0	L1 13 L2 13 L3 13
J12	12.0 (2x6)	2 x 26.0	2 x L1 13 2 x L2 13 2 x L3 N/A
J18	18.0 (2x9)	2 x 39.0	2 x L1 13 2 x L2 13 2 x L3 13

On J fryers, assemble the nuts provided to each foot, add a washer and fit the feet to the holes provided in the base.

It is essential that the stability kit provided is used with J6 and J9 fryers. Bolt the base plate to the floor, attach the stability bracket using the bolts and washers provided and push the fryer into position, ensuring that the wings on the bracket locate into the slots at the base of the fryer back. (Fig 1).

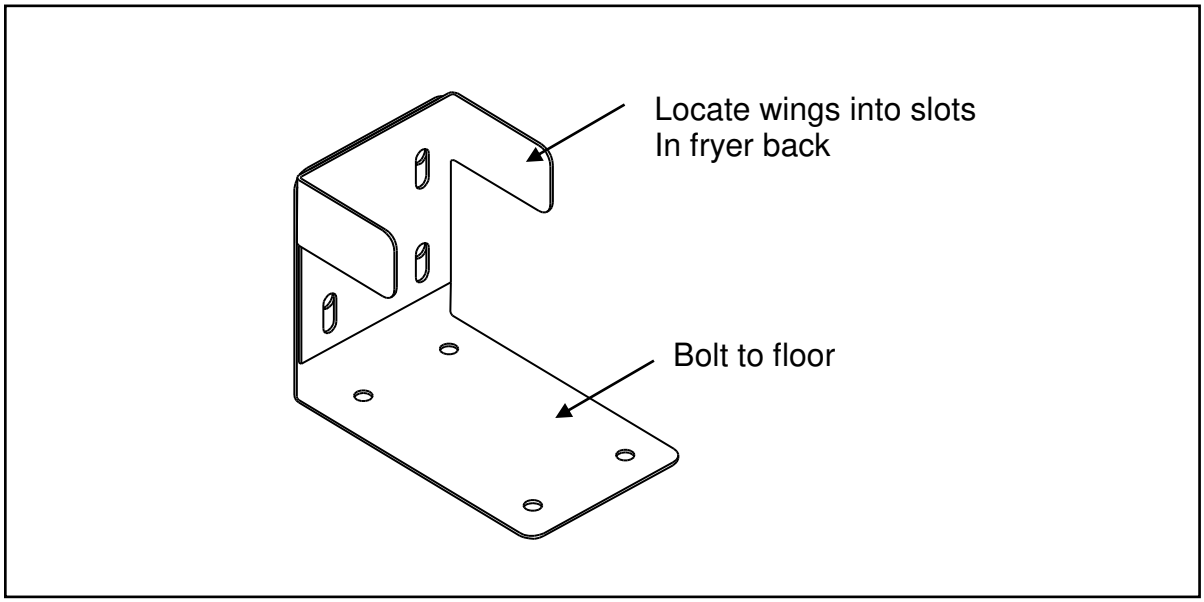

Fig 1

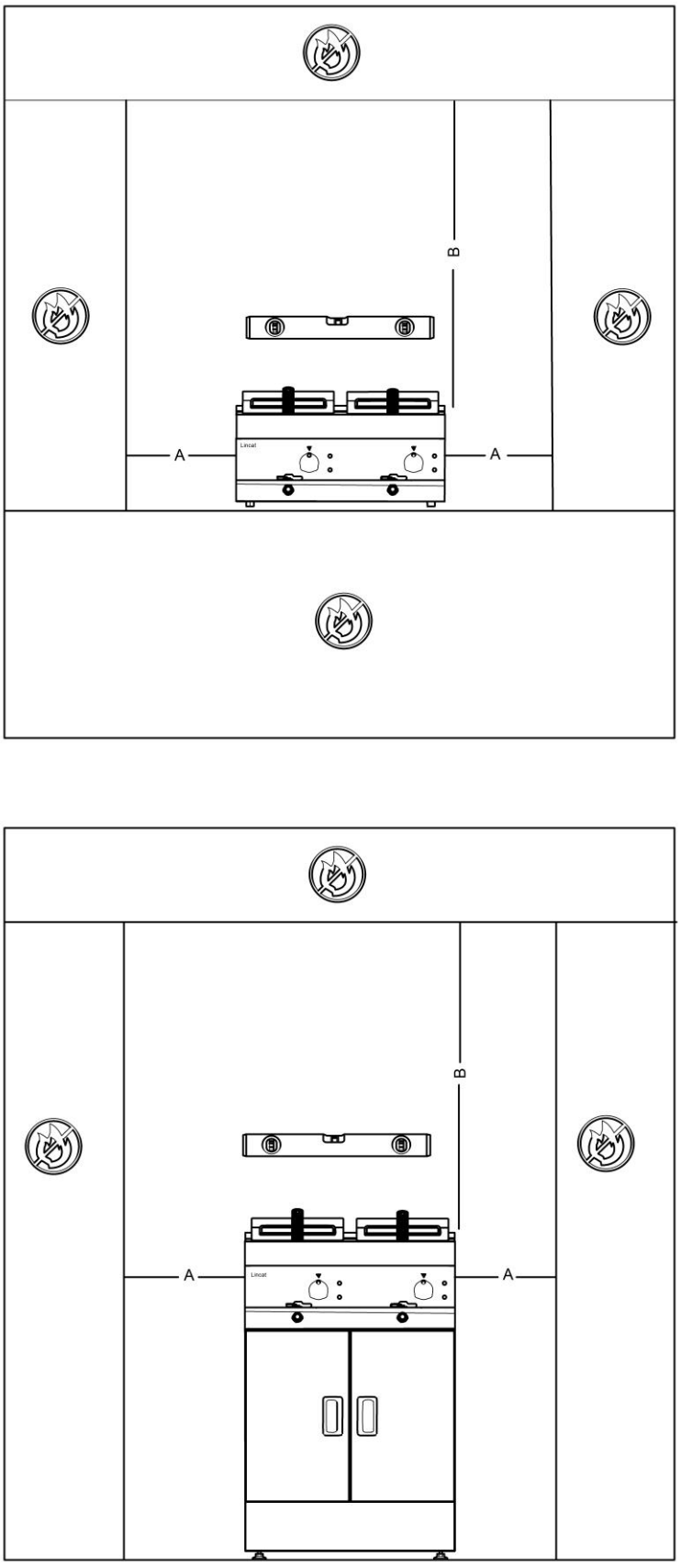

Fig 2

OPERATING INSTRUCTIONS

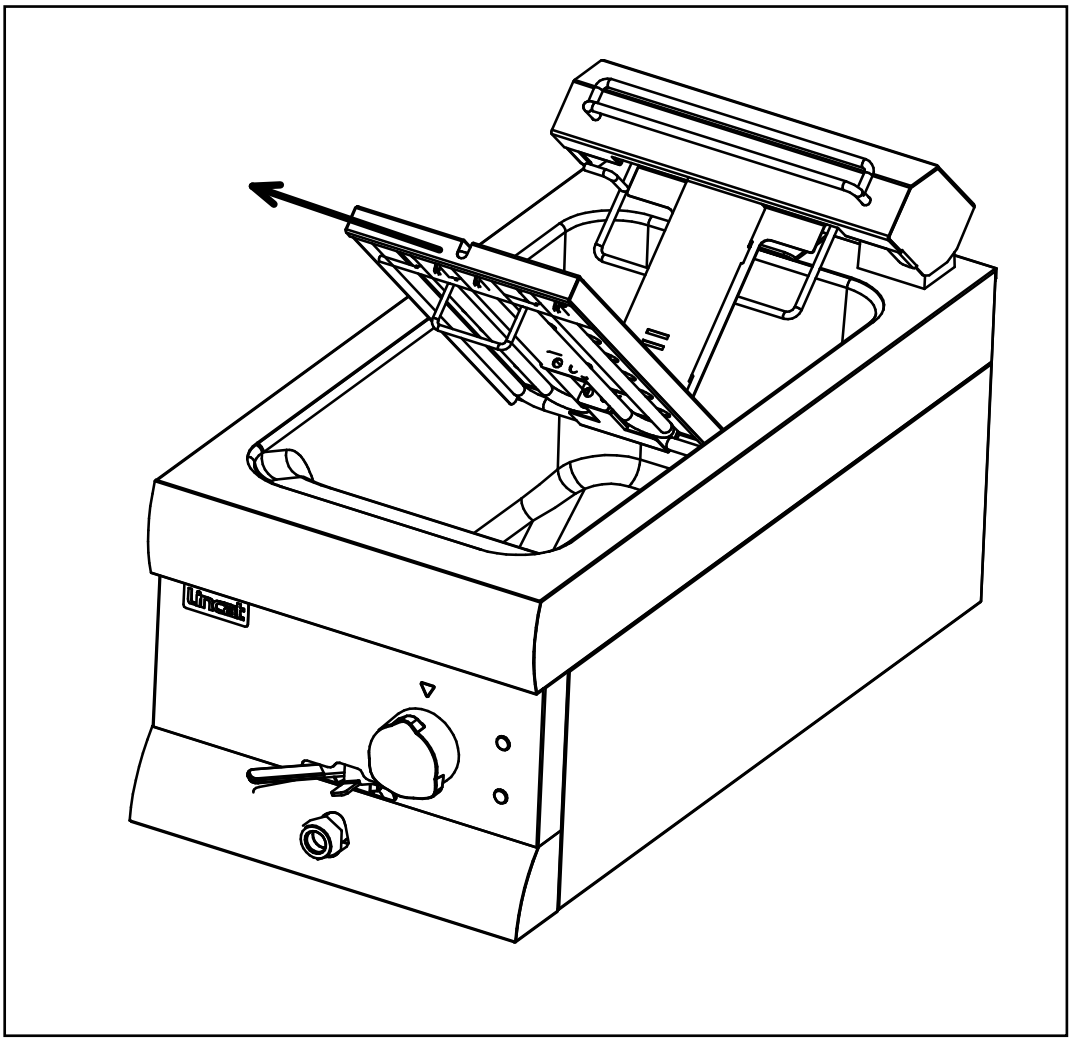

Fig 3

Only qualified or trained personnel should use this appliance.

Always drain food before frying. Never allow water into the oil.

Before first use, clean the tank. Remove the batter plate from the tank by swivelling up from the front until the batter plate can be slid forward and removed from the element (Fig 3).

Lift the elements up and back Fig 4 (A) until the stay engages behind the bracket (B).

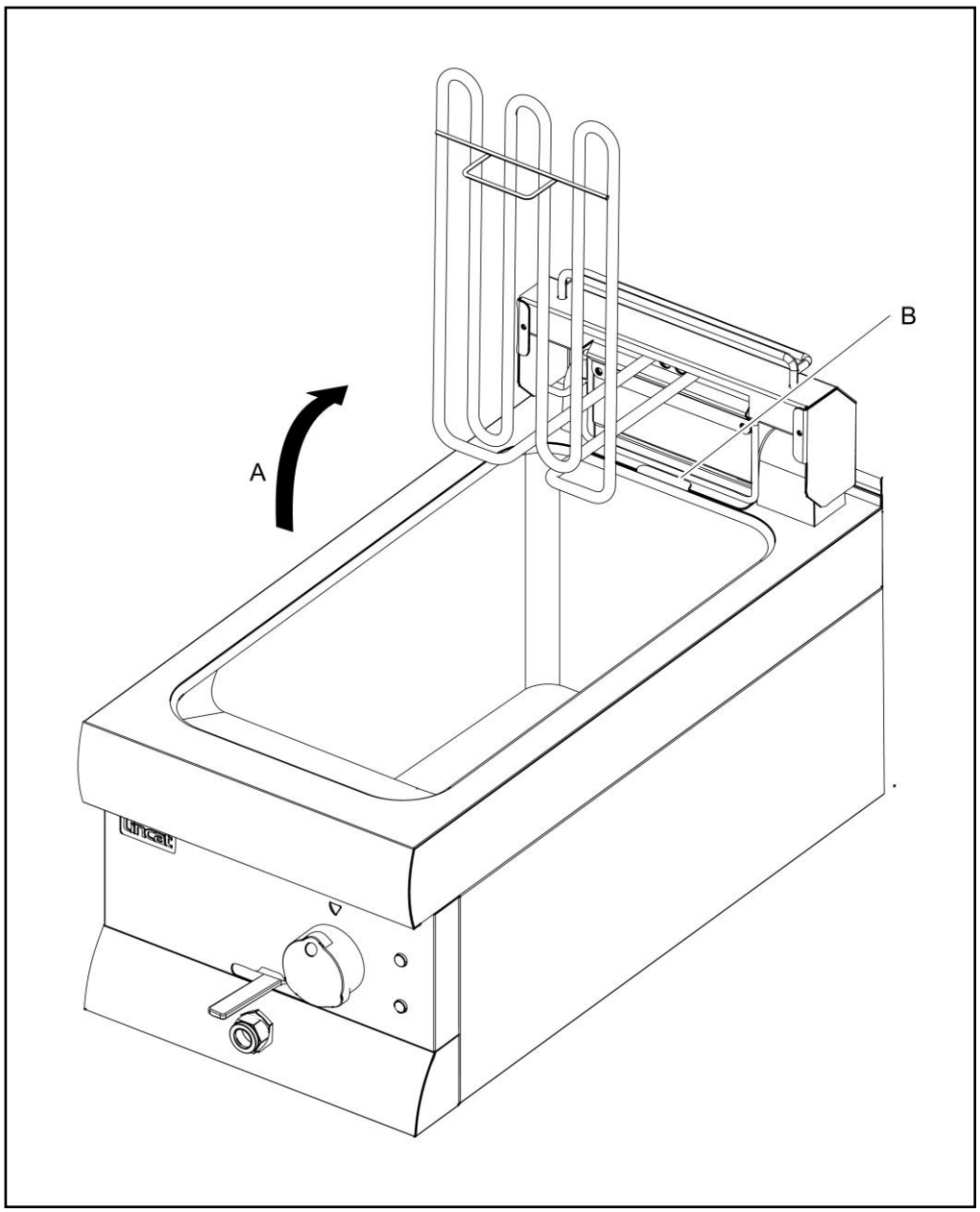

Fig 4

Clean the tank with warm water and mild detergent. Dry thoroughly.

Re-position the element by gently pushing it back, lift and disengaging the stay then lower the element back into place, sliding on the batter plate when the element is half-lowered.
Check the drain valve is closed (lever fully left) before adding clean oil up to the mark on the thermostat cover (Fig 5 Detail A)

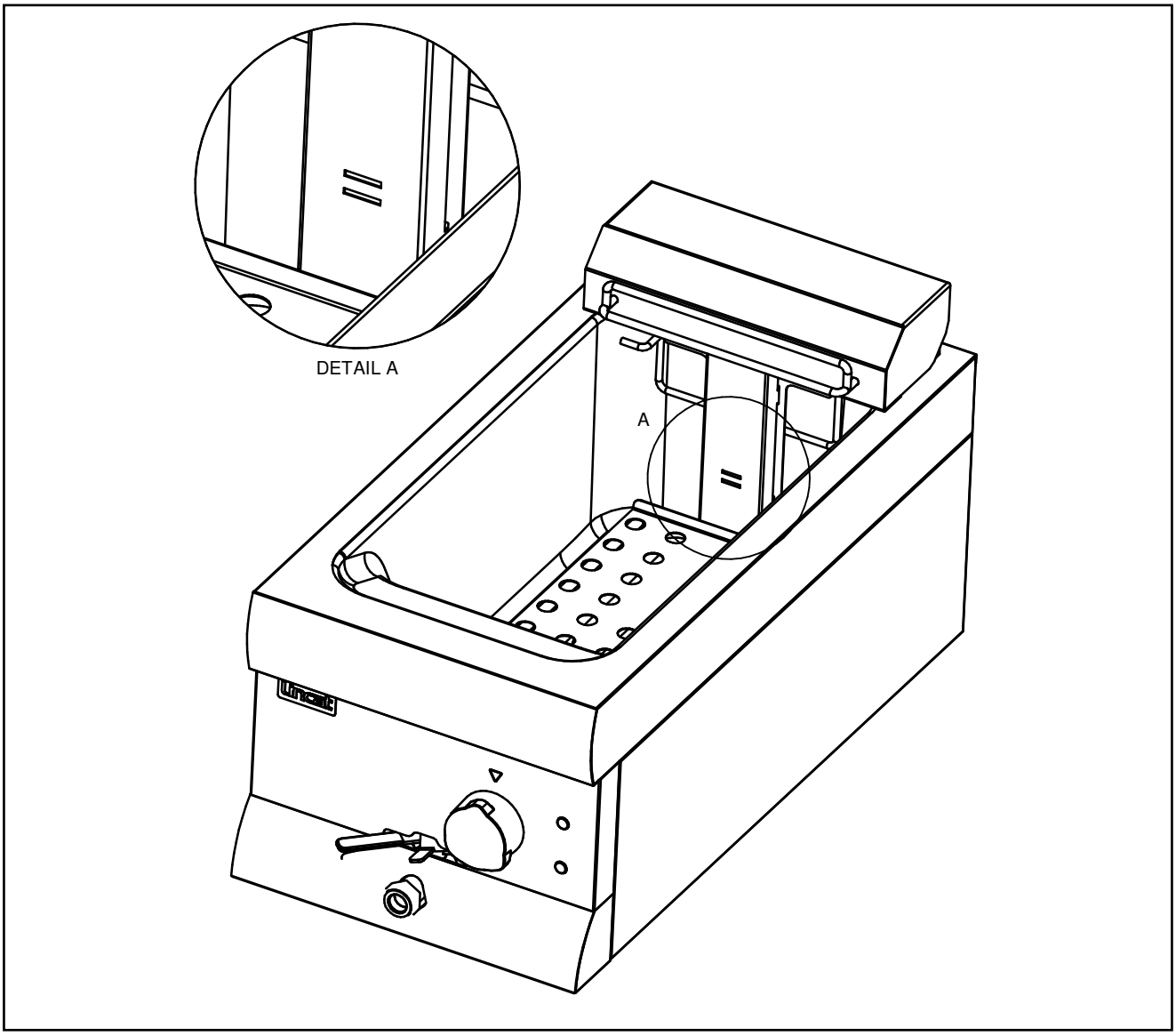

Fig 5

Connect the appliance to the electricity supply – the green neon illuminates to indicate power to the fryer.
Turn the control knob to the desired setting. The amber neon illuminates.
The amber neon will extinguish when the set temperature is reached, and then operates with the cycling of the element.

Always maintain the oil level up to the indicator line on the thermostat cover at the rear. Do not overfill.

All appliances are fitted with a safety thermostat to cut off the power in the event of a fault. If the green neon illuminates but the elements do not heat, reset the safety thermostat. On all models except DF33 and DF66, this is achieved by pressing the red button on the rear panel.
On DF33 and DF66 models, the reset button is on the rear, covered by a black cap. Unscrew the cap and reset the thermostat by depressing the centre of the boss using a suitable implement.
The fryer must be cool before the safety thermostat can be reset – there will be an audible click when it resets.

After use, allow the oil to cool before draining the tank.

CLEANING



Do not use a water jet or steam cleaner, and do not immerse this appliance.

Clean all panels with warm water and mild detergent, do not use abrasive materials. Dry with a soft cloth.

To clean the tank, raise the element as detailed in Operating instructions. The lifting hook can be used to lift the element from the oil before draining.

A proprietary cleaner such as 'Carb'nOff' may be used.

SERVICING, MAINTENANCE AND COMPONENT REPLACEMENT

All servicing, maintenance and component replacement on these appliances should be carried out by one of our recommended service engineers.

FAULT FINDING

Please refer to the Service Help Desk number on the final page of this manual.

SPARE PARTS LIST

Part Number	Description	Used on
BA91	Basket	All excluding DF66/ST
BA113	Basket	DF66/ST
CO215	Contactor	All models over 3kW
DS24	Drain tap	All
EL257	Element	DF39, DF618, J9, J18
EL264	Element	DF33, DF66
EL265	Element	DF36, DF612, J6, J12
EL266	Element	DF46
EL267	Element	DF49
EL268	Element	DF66/ST
FE10	Foot - cabinet	J models
FE37	Foot	All
GA53	Gasket – RH casting	All
GR02	Cone grommet – capillary	All
HA73	Door handle	J models
HI24	Hinge	J models
HI25	Hinge plate	J models
FZ100805	Element lifting hook	All
KN10	Lid knob	All
KN183	Control knob	All
NE42	Amber neon	All
NE43	Green neon	All
PL202	Mains cable	DF33, DF66
FZ400547	Microswitch	All
TE45	Terminal block	All models over 3kW
TH61	Safety thermostat	All except DF33 DF66
TH206	Safety thermostat	DF33 DF66
TH69	Control thermostat	All
WS01	Wire stay	All

ACCESSORIES

Part Number	Description	Used on
BA96	Half size basket	All
DC02	Doughnut conversion kit	All excluding DF46, DF49
DC03	Doughnut conversion kit	DF46, DF49
DCD01	Doughnut dispenser	All

SERVICE INFORMATION

For help with the installation, maintenance and use of your **Lincat** equipment, please contact our service department:

☎ UK: 01522 875520

For non-UK customers, please contact your local Lincat dealer

All service work, other than routine cleaning should be carried out by one of our authorised service agents. We cannot accept responsibility for work carried out by other persons.

To ensure your service enquiry is handled as efficiently as possible, please tell us:

- Brief details of the problem
- Product code
- Type number
- Serial number

} All available on serial plate

Lincat reserve the right to carry out any work under warranty, given reasonable access to the appliance, during normal working hours, Monday to Friday, 08:30 to 17:00.

GUARANTEE

This unit carries a comprehensive UK mainland 2 year warranty. The guarantee is in addition to, and does not diminish your statutory or legal rights.

The guarantee does not cover:

- Accidental damage, misuse or use not in accordance with the manufacturer's instructions
- Consumable items (such as filters, glass, bulbs, slot toaster elements and door seals.)
- Damage due to incorrect installation, modification, unauthorised service work or damage due to scale, food debris build-up, etc.

The manufacturer disclaims any liability for incidental, or consequential damages.
Attendance is based on reasonable access to the appliance to allow the authorised technician to carry out the warranty work.

Service calls to equipment under warranty will be carried out in accordance with the conditions of sale. Unless otherwise specified, a maximum of 15 minutes of administrative time, not spent directly carrying out servicing work, is provided for within the warranty. Any requirement for staff attending the call to spend greater time than 15 minutes due to administrative requirements, such as on health and safety risk assessments, will be chargeable at the prevailing rate.