LINCAT LYNX TALL CONVECTION OVEN - W 495 MM - D 570 MM - 2.5 KW

MODEL: LCOT

AIA FILE NUMBER:

ITEM NUMBER:



UKWhether you're making croissants, rolls, pies, pastries, pizzas our new plug and play Lynx 400 Series Tall Convection Oven is a fantastic addition to your kitchen if you're short of space.

LYNX400

PRODUCT OPTIONS AND ACCESSORIES

- SH139 Shelf for LCOT oven 378mm x 330mm

PRODUCT FEATURES

- Powerful fan assisted cooking for uniform heat, and consistent cooking results
- Powerful 2.5kW oven allows rapid heat up time
- Accommodates 4 x 2/3 gastronorms placed directly on shelf runners
- Easy plug and play operation 13A plug
- Temperature range 50 250Â°C
- Simple dial controls with 60 minute timer enabling accurate cooking time
- Side opening door with double glazed glass viewing panel, for energy efficiency, and cool touch door
- Two removable chromed rod shelves

LINCAT LYNX TALL CONVECTION OVEN - W 495 MM - D 570 MM - 2.5 KW

MODEL: LCOT

WEIGHTS & DIMENSIONS

Product Width	495 mm
Product Depth	570 mm
Product Height	520 mm
Product Dimensions (WxDxH) (mm)	495 Millimeter X 570 Millimeter X 520 Millimeter
Product Weight	29 kg
Product Clearance Required: Top	1,000 mm
Product Clearance Required: Back	100 mm
Product Clearance Required: Left Side	100 mm

SHIPPING DETAILS

Ship Width	68.5 cm
Ship Depth	81.3 cm
Ship Height	76.5 cm
Ship Weight	32.23 kg
Ship Method	Small Parcel (Ups Fedex Dhl)
Shipping Package Type	Pieces

PRODUCT CERTIFICATION ICONS

Made in UK UKCA IP24

ENERGY SPECIFICATIONS

Primary Energy Type	Electric
Electrical Volts	230V

ADDITIONAL TECHNICAL SPECIFICATIONS

Cooking Chamber Width	380 mm
Cooking Chamber Depth	390 mm
Cooking Chamber Height	362 mm
Cooking Rack Depth	326 mm
Cooking Rack Width	378 mm

Number of Pans	0
Oven Size (volume)	1.9 ft^3
Temperature Minimum	50 °C
Temperature Maximum	250 °C

bidding specifications

Lincat reserves the right to modify specifications or discontinue models without incurring obligation. Dimensions nominal.

Document Auto-Generated

LINCAT LYNX TALL CONVECTION OVEN - W 495 MM - D 570 MM - 2.5 KW

MODEL: LCOT

TECHNICAL DRAWING

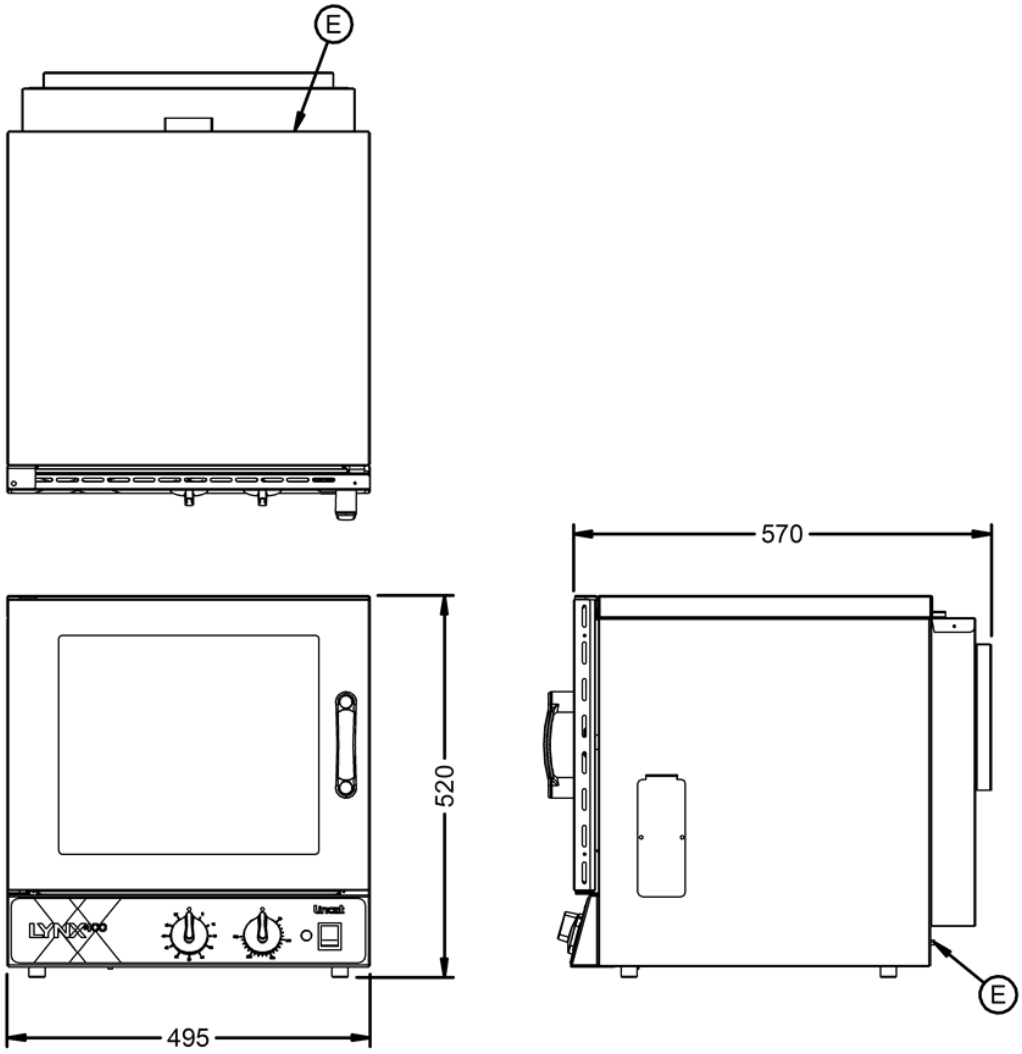

Lincat reserves the right to modify specifications or discontinue models without incurring obligation. Dimensions nominal.

Document Auto-Generated