Installation, Operating and Servicing Instructions

Lynx Electric Convection Ovens
LCOT, LCOS, LCOXL

Please make a note of your product details for future use:

Date Purchased:_____

Model Number:_____

Serial Number:_____

Dealer:_____

_____

LYNX 400

CONTENTS

Important Information	2
Warnings and Precautions	3
Technical Data	3
Checklist of Enclosures	3
Installation and Commissioning	3
Operating Instructions	5
Cleaning	6
Servicing, Maintenance and Component Replacement	7
Fault Finding	7
Spare Parts List	7
Service Information and Guarantee	8

IMPORTANT INFORMATION



Read these instructions carefully before using this product, paying particular attention to all sections that carry warning symbols, caution symbols and notices. Ensure that these are understood at all times.



WARNING!
This symbol is used whenever there is a risk of personal injury.



CAUTION!
This symbol is used whenever there is a risk of damaging your Lincat product.



NOTE:
This symbol is used to provide additional information, hints and tips.

KEEP THIS MANUAL FOR FUTURE REFERENCE

WARNINGS AND PRECAUTIONS



This appliance must be installed, commissioned and serviced by a qualified person in accordance with national and local regulations in force in the country of installation.

If the supply cord is damaged, it must be replaced by the manufacturer, its service agent or similarly qualified person.

Ensure that the plug/socket is accessible at all times.

Strip plastic coating and clean the appliance before use.

During operation parts may become hot - avoid accidental contact.

Disconnect this appliance before servicing, maintenance or cleaning.

TECHNICAL DATA

Model	Height (mm)	Width (mm)	Depth (mm)	Weight (kg)
LCOT	520	495	570	29.3
LCOS	520	405	570	28.4
LCOXL	605	670	570	49.6

CHECK LIST OF ENCLOSURES

Instruction manual	1
Wire shelves LCOT, LCOS	2
Wire shelves LCOXL	3
Feet LCOXL	4

INSTALLATION AND COMMISSIONING

This appliance must be earthed.



An equipotential bonding terminal is provided to allow cross bonding with other equipment.

If replacing the plug connect the terminals as follows:
Green and Yellow wire Earth E

Blue wire	Neutral	N
Brown wire	Live	L

Supply cords shall be oil resistant, sheathed flexible cable not lighter than ordinary polychloroprene or equivalent elastomer sheathed cord (code 60245 IEC 57)

Install this appliance on a level surface ensuring all vents are unobstructed. Install this appliance on a level surface ensuring all vents are unobstructed. Any partitions, walls or furniture must be of non-combustible material. Minimum distances A 100mm B 1000mm – see Fig 1.

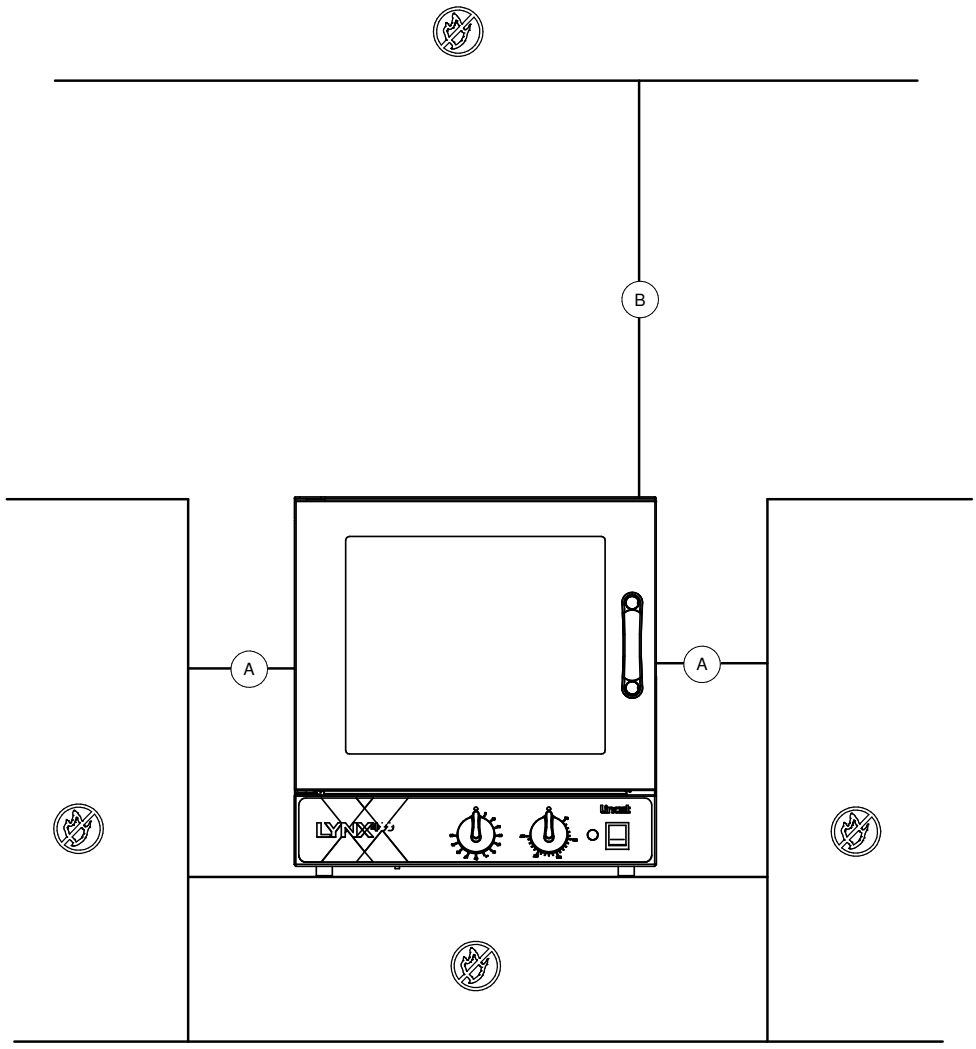

Fig 1

Power Ratings

Model	kW	Amps
LCOT, LCOS, LCOXL	2.5	10.9

OPERATING INSTRUCTIONS

Only qualified or trained personnel should use this appliance.

Connect the appliance to an electricity supply and switch on at the socket. Press the switch on the appliance to the 'On' position – the switch and interior light illuminate, and the fan operates.

Turn the temperature control knob to the desired setting – the amber neon illuminates and extinguishes when temperature is reached.

During operation, the amber neon will periodically illuminate as the element cycles.

Adjacent to the temperature control is a 55 minute mechanical timer.

This appliance is fitted with a safety thermostat, which will cut power to the appliance under fault conditions. If the switch illuminates but the appliance does not heat up, the safety thermostat may need re-setting. This is achieved by pressing the red button located as shown in Fig 2. Note that in the event of the safety thermostat operating, the appliance must be allowed to cool before it can be re-set.

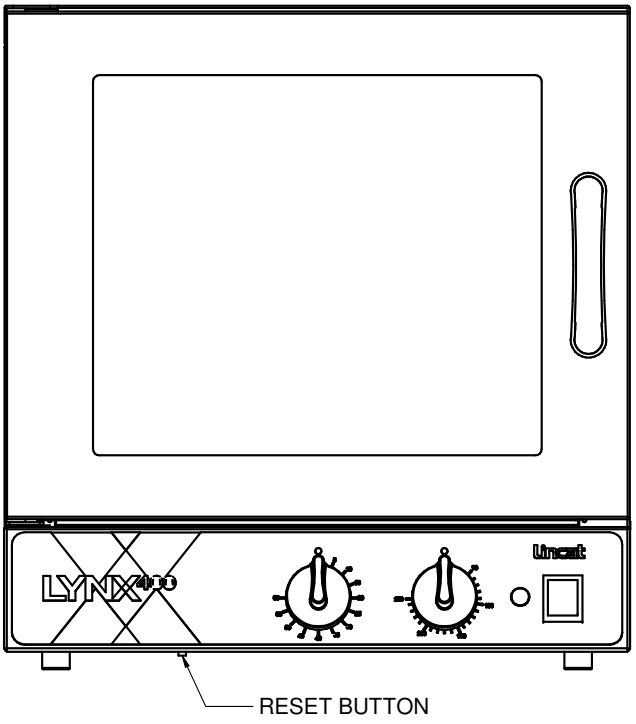

Fig 2

CLEANING

Do not use a water jet or steam cleaner, and do not immerse this appliance. Clean all panels with warm water and mild detergent. Do not use abrasive materials, and do not use caustic or chloride based cleaners. Dry with a soft cloth.

If required, the shelf supports in the oven may be removed to allow a thorough clean of the interior. The shelves are bolted in place tightly during transport to avoid damage. On delivery, back off the 3 bolts holding each shelf by 2mm. This will allow the shelf supports to be pushed upward slightly and then lifted out through the keyhole slot provided. On re-fitting, the bolts do not need to be retightened, which will allow the shelf supports to be clipped in and clipped out as necessary in the future.

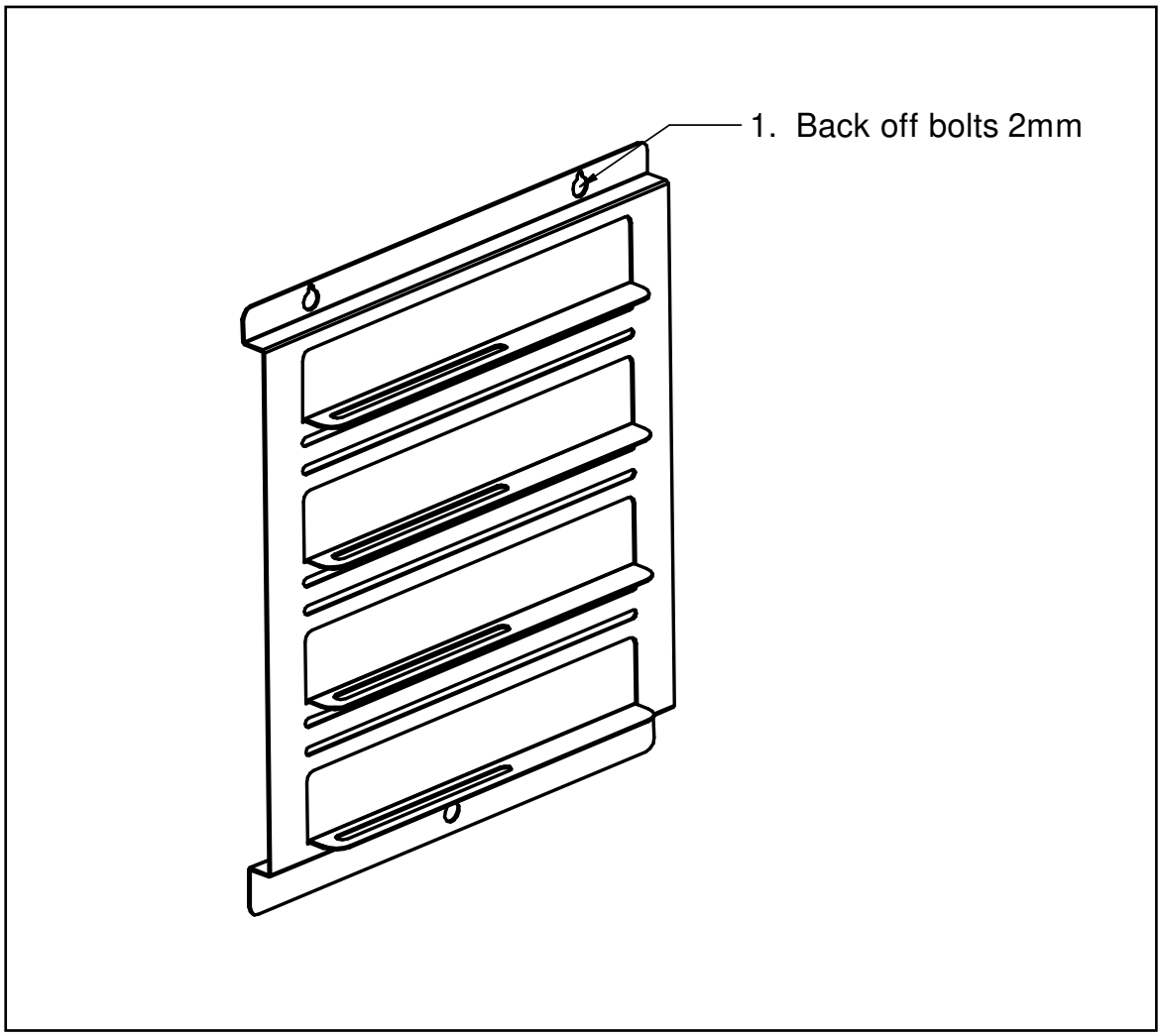

Fig 3

SERVICING, MAINTENANCE AND COMPONENT REPLACEMENT

Door inner glass: Slide glass up to clear side brackets and remove from top. To replace the glass, reverse the procedure.

Light bulb: Lever off the glass cover using a small flat bladed screwdriver. Unscrew bulb. To replace the bulb, reverse the procedure.

Door seals: These simply hook out of the holes. Hook out to remove and replace by hooking the new seal into position.

All other servicing, maintenance and component replacement on this appliance should be carried out by one of our recommended service engineers.

FAULT FINDING

Please refer to the Service Help Desk number on the final page of this manual.

SPARE PARTS LIST

Part Number	Description
BU55	Door hinge bush
EL232	Element
FA106/S	Fan
FE37	Foot LCOT, LCOS
FE10	LCOXL
GA75	Fan gasket
GL707	Door inner glass LCOT
GL709	Door inner glass LCOS
GL711	Door inner glass LCOXL
KN250	Control/Timer knob
LA10	Lamp
LE14	Clear cover for On/Off switch
NE42	Amber neon
PL202	Mains cable
SE35	Door seal top – LCOT or Door seal side LCOXL
SE94	Door seal side – LCOT, LCOS
SE95	Door seal top - LCOS
SE96	Door seal top - LCOXL
SH139	Shelf LCOT
SH140	Shelf LCOS
SH141	Shelf LCOXL
SW69	Switch
TH46	Control thermostat
TH203	Safety thermostat
TI37	Timer

SERVICE INFORMATION

For help with the installation, maintenance and use of your **Lincat** equipment, please contact our service department:

☎ UK: 01522 875520

For non-UK customers, please contact your local Lincat dealer

All service work, other than routine cleaning should be carried out by one of our authorised service agents. We cannot accept responsibility for work carried out by other persons.

To ensure your service enquiry is handled as efficiently as possible, please tell us:

- Brief details of the problem
- Product code
- Type number
- Serial number

} All available on serial plate

Lincat reserve the right to carry out any work under warranty, given reasonable access to the appliance, during normal working hours, Monday to Friday, 08:30 to 17:00.

GUARANTEE

This unit carries a comprehensive UK mainland 2 year warranty. The guarantee is in addition to, and does not diminish your statutory or legal rights.

The guarantee does not cover:

- Accidental damage, misuse or use not in accordance with the manufacturer's instructions
- Consumable items (such as filters, glass, bulbs, slot toaster elements and door seals.)
- Damage due to incorrect installation, modification, unauthorised service work or damage due to scale, food debris build-up, etc.

The manufacturer disclaims any liability for incidental, or consequential damages.
Attendance is based on reasonable access to the appliance to allow the authorised technician to carry out the warranty work.

Service calls to equipment under warranty will be carried out in accordance with the conditions of sale. Unless otherwise specified, a maximum of 15 minutes of administrative time, not spent directly carrying out servicing work, is provided for within the warranty. Any requirement for staff attending the call to spend greater time than 15 minutes due to administrative requirements, such as on health and safety risk assessments, will be chargeable at the prevailing rate.