Installation, Operating and Servicing Instructions

CONVECTOR

Electric Convection Ovens

CO343M, CO343T

Please make a note of your product details for future use:

Date Purchased:_____

Model Number:_____

Serial Number:_____

Dealer:_____

_____

CONTENTS

Important Information	2
Warnings and Precautions	3
Checklist of Enclosures	3
Technical Data	3 - 4
Installation and Commissioning	5
Operating Instructions	6 - 10
Fault Finding	10
Cleaning	11
Servicing, Maintenance and Component Replacement	11 - 12
Spare Parts List	13
Accessories	14
Service Information and Guarantee	15

IMPORTANT INFORMATION



Read these instructions carefully before using this product, paying particular attention to all sections that carry warning symbols, caution symbols and notices. Ensure that these are understood at all times.



WARNING!
This symbol is used whenever there is a risk of personal injury.



CAUTION!
This symbol is used whenever there is a risk of damaging your Lincat product.



NOTE:
This symbol is used to provide additional information, hints and tips.

KEEP THIS MANUAL FOR FUTURE REFERENCE

WARNINGS AND PRECAUTIONS



This appliance must be installed, commissioned and serviced by a qualified person in accordance with national and local regulations in force in the country of installation.

If the supply cord is damaged, it must be replaced by the manufacturer, its service agent or similarly qualified person.

Ensure that the plug/socket is accessible at all times.

Strip plastic coating and clean the appliance before use.

During operation parts may become hot - avoid accidental contact.

Disconnect this appliance before servicing, maintenance or cleaning.

CHECK LIST OF ENCLOSURES

Instructions Manual
Shelves 4

TECHNICAL DATA

Model	Supply	Rating	Capacity	Tray Spacing	Weight (kg)
CO343M	1P+N+E, 50-60 HZ	3.0kW	4 x 1/1GN	85	68.0
CO343T	1P+N+E, 50-60 HZ	3.0kW	4 x 1/1GN	85	68.7

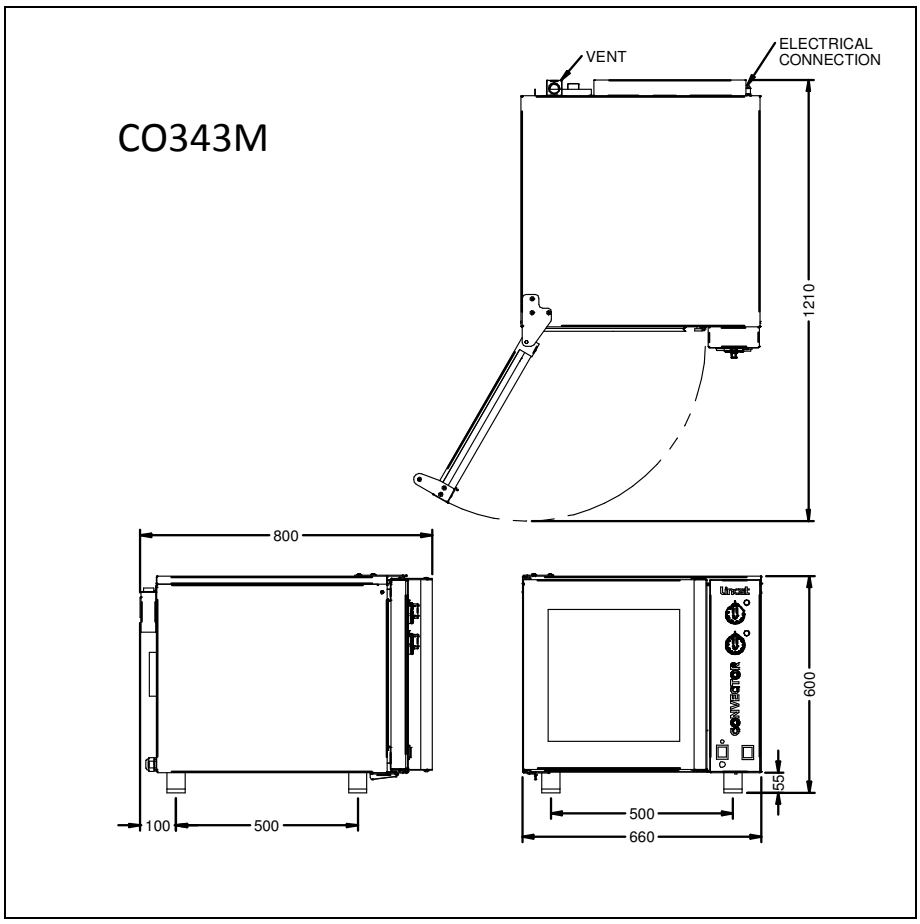
CO343M
VENT
ELECTRICAL CONNECTION
1210
800
600
55
100
500
500
660
CONVECTOR

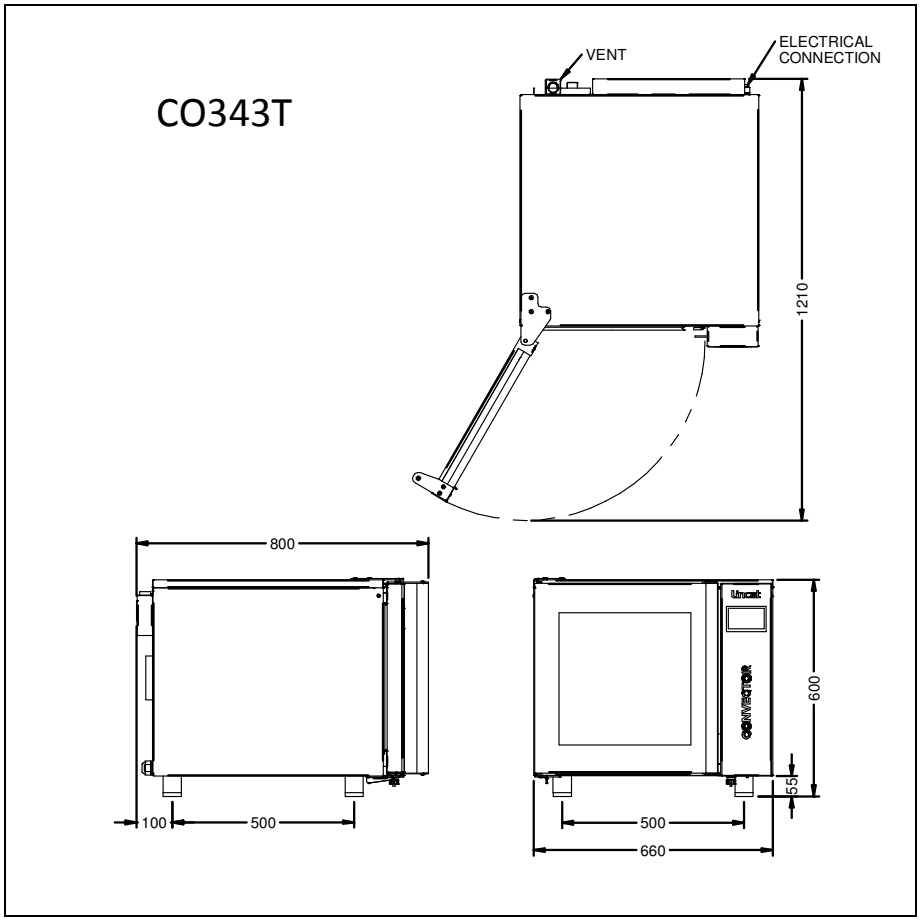
CO343T
VENT
ELECTRICAL CONNECTION
1210
800
600
55
100
500
500
660
CONVECTOR

INSTALLATION AND COMMISSIONING

This appliance must be earthed.

An equipotential bonding terminal is provided to allow cross bonding with other equipment.

If replacing the plug connect the terminals as follows:

Green and Yellow wire	Earth	E
Blue wire	Neutral	N
Brown wire	Live	L

Means of isolation with at least 3mm contact separation in all poles must be incorporated into the fixed wiring of the CO235M and CO235T. These units must be connected by a qualified electrician (see power ratings).

The fixed wiring insulation must be protected by insulated sleeving having a temperature rating of 60 Deg C.

Supply cords shall be oil resistant, sheathed flexible cable not lighter than ordinary polychloroprene or equivalent elastomer sheathed cord (code 60245 IEC 57)

Install this appliance on a level surface ensuring all vents are unobstructed. Any partitions, walls or furniture must be of non-combustible material. Minimum distances A 200mm B 1000mm – see Fig 1. Leave 100mm for services.

An air filter will need occasional access. This is positioned underneath on the right hand side between the adjustable legs.

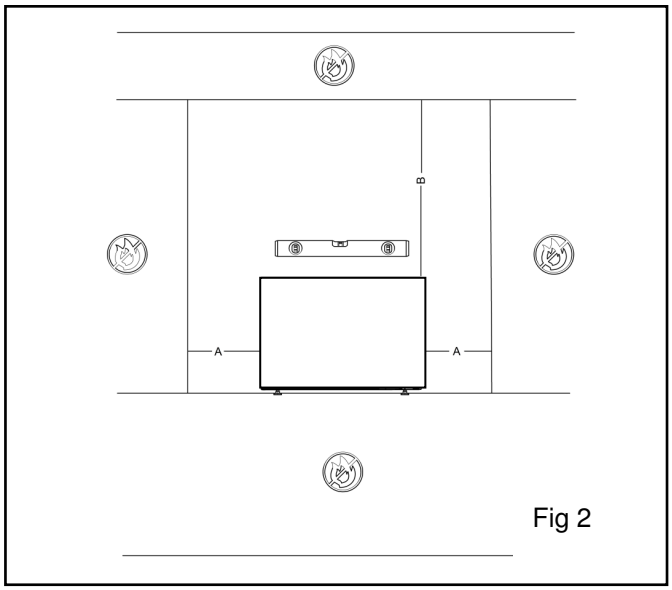

Fig 2

OPERATING INSTRUCTIONS

Only qualified or trained personnel should use this appliance.

MODEL: CO343M

A- On/Off

B- Power supply indicator

C- Oven heating indicator

D- Temperature control knob

E- Fan Speed

F- 120 minute timer

G- Reset

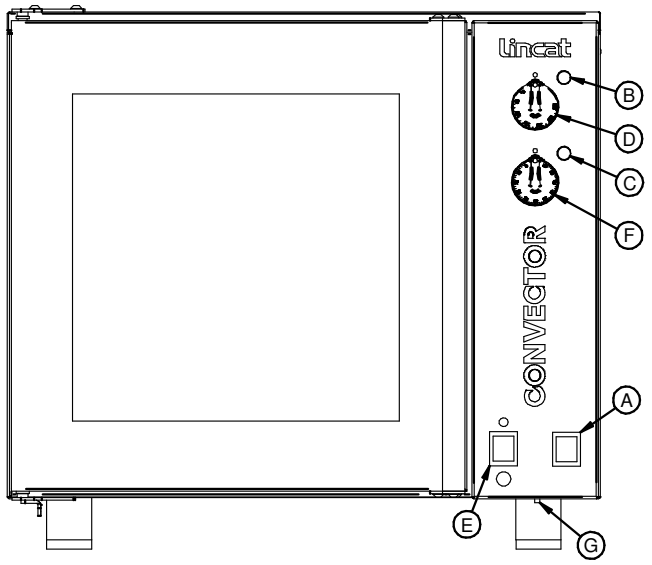

Fig 3

Connect the appliance to the electricity supply. The green neon (B) illuminates indicating power to the appliance. Select the On/Off switch (A), the switch will illuminate and the fan will start rotating.

Select the desired fan speed, slow or fast (E).

Set the thermostat (D) to the desired temperature, the amber neon (C) will indicate that the unit is heating.

When at the set temperature the amber light will turn off and will alternate on or off to maintain the set temperature.

Load products onto the shelves and if required set the timer (F).

When the set time expires the buzzer/lights will sound/flash.

Carefully open the door and remove the cooked products. Opening the door will cancel the buzzer and flashing lights.

Note: When the door is opened, if the fan is set to fast speed, the fan will switch from fast to slow speed and return to fast speed when the door is closed.

To turn the unit off set the temperature control knob to the off position and switch off at the mains.

MODEL: CO343T

A- Touch Screen

B- Reset

C- USB

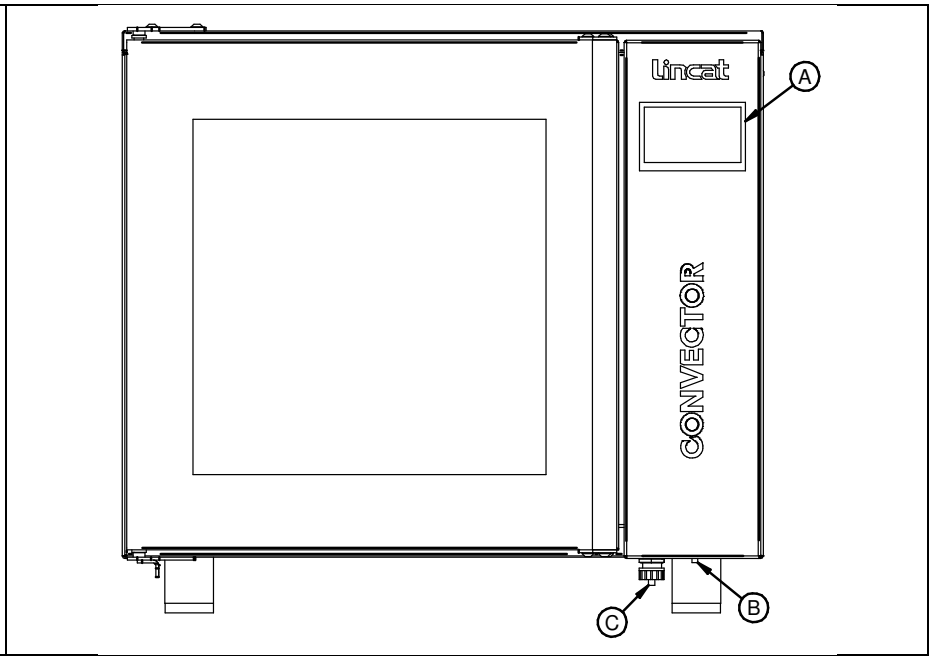

Fig 4

Only qualified or trained personnel should use this appliance.

Connect the appliance to the electricity supply. The unit will beep once and will self-test the elements and fans. The screen will show the CONVECTOR logo and then go to the home screen.

Refer to the Programming guide for the user interface operation and programming.

To use the unit simply select the correct program. The unit will Pre-heat to the set temperature and beep when ready to be loaded with product.

Place the food in the oven and press cook. The oven will cook the food and when the set time expires the buzzer/lights will sound/flash. On screen timers will also indicate the timer has expired.

Press done and remove the food from the oven.

To adjust the clock settings go to the home screen, click on the clock in the top right corner, select the hours or minutes to change, adjust and save.

How to programme your Touch screen Convector

(CO343T).

Home screen

This is where you run recipes from (just press the recipe you want). You can switch into the oven mode from here. Pressing recipe manager takes you into the programming area

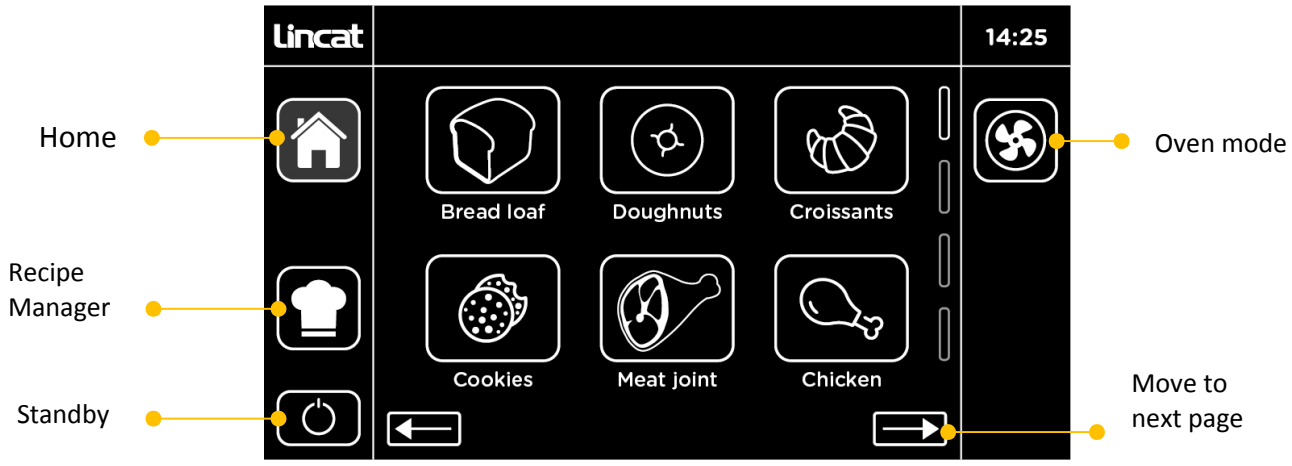

Recipe Manager

This lets you select a recipe to edit (just press the recipe). Here you can also reassign the order recipes are presented in, access further oven settings and run updates



Recipe summary and edit screen

This is where you view your recipe with changes highlighted in green. Press on the steps to edit them. Press on the name bar to rename the recipe. Attach or change an icon from the library. Click on to save to keep your recipe. Or exit without saving.

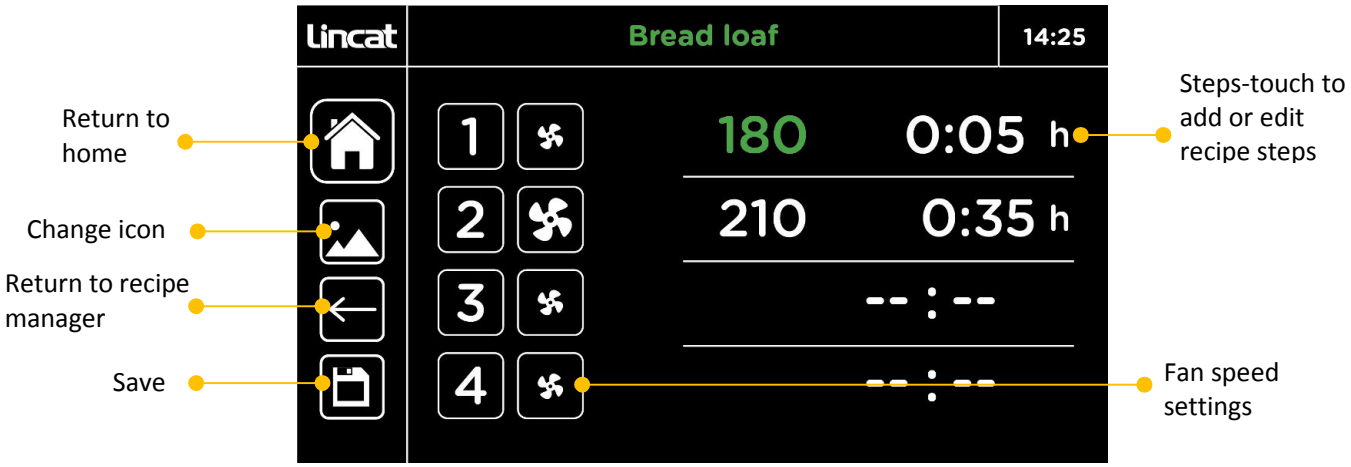

Recipe summary and edit screen

This is where you adjust the times, temperature and fan speeds.

The recipe summary button takes you back to the summary screen so you can review changes and save.

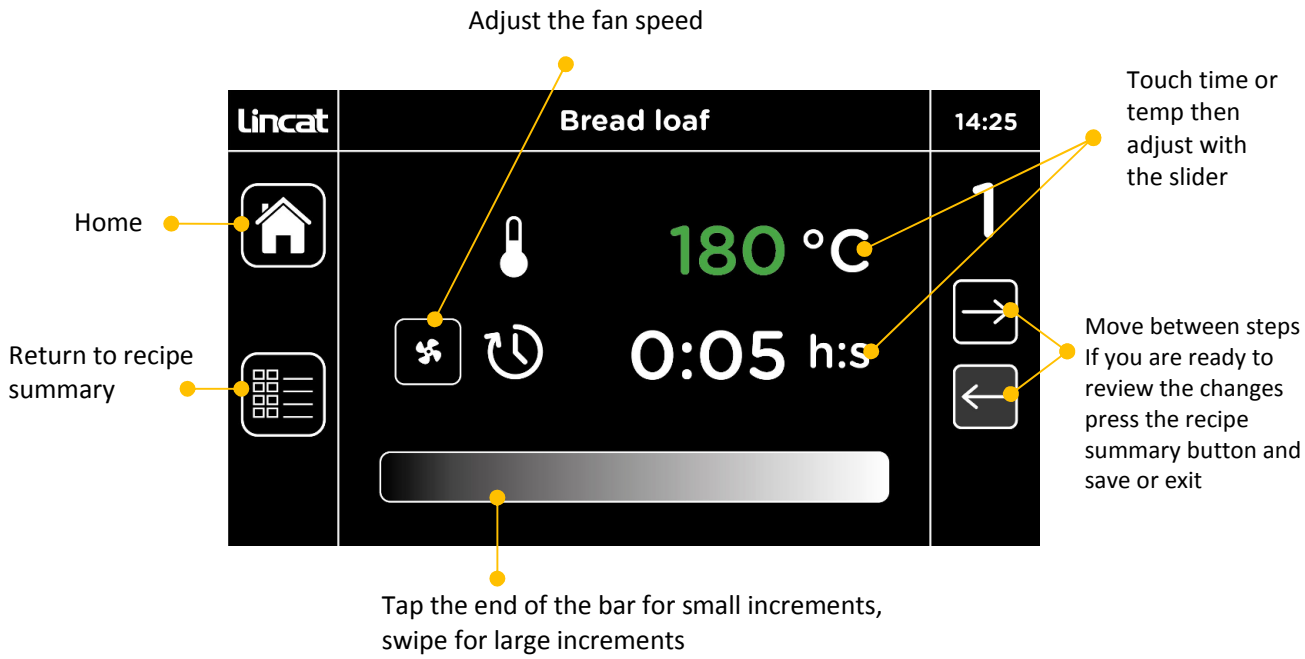

Timer screen

In oven mode you can change the temperature and run up to 4 count down timers. Alternatively don't enter a time and it will maintain the set temperature indefinitely.

The fan speed can be increased or decreased.

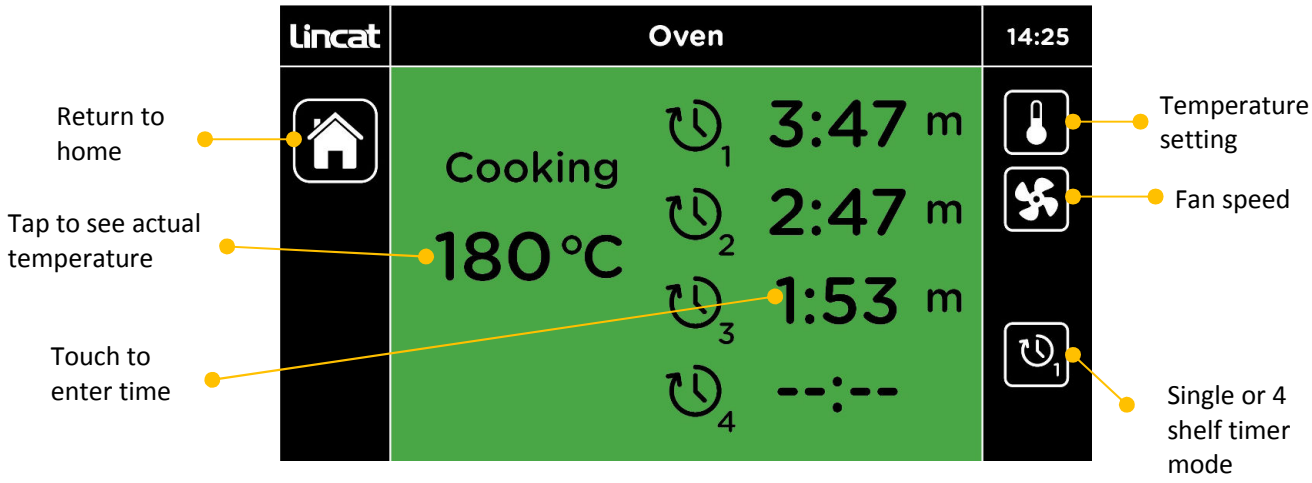

FAULT FINDING

This appliance is fitted with a safety thermostat, which will cut power to the appliance under fault conditions. If when turning the unit on it fails to operate firstly check the power supply to the unit then the reset before contacting Lincat service. To re-set the safety thermostat, firmly push the red button which is recessed under the front edge of the unit see (Fig 3 – 4). This re-set cannot be activated until the appliance is cool. If this continues to happen please call our service department.

Please refer to the Service Help Desk number on the final page of this manual.

CLEANING

Your product has a manufacturer's warranty. This requires you maintain and care for your product and follow maintenance instructions. If you fail to maintain your unit or damage components Lincat may charge you for a warranty repair. Please check the website for terms and conditions.



Do not use a water jet or steam cleaner, and do not immerse this appliance.

Clean all panels with warm water and mild detergent, do not use abrasive materials.

Dry with a soft cloth.

Please refer to the Lincat website for the recommended cleaning products.

Avoid damaging the thermostat bulbs inside the oven when cleaning.

To assist cleaning remove shelf supports – see Servicing.

SERVICING, MAINTENANCE AND COMPONENT REPLACEMENT

All servicing, maintenance and component replacement on this appliance should be carried out by one of our recommended service engineers.

The door seal and bulbs are considered consumable parts and are not covered by the warranty. These are customer replaceable parts.

Door inner glass removal and refitting

With the door open, unclip and swing open the inner glass. Support the inner glass assemble and undo the two screws and remove the retaining bracket. Tilt and lift the inner glass assembly from the lower fixed pin.

To refit, position onto the lower fixed pin then place the retaining bracket in place on the inner glass upper metal bracket then refit the screws.

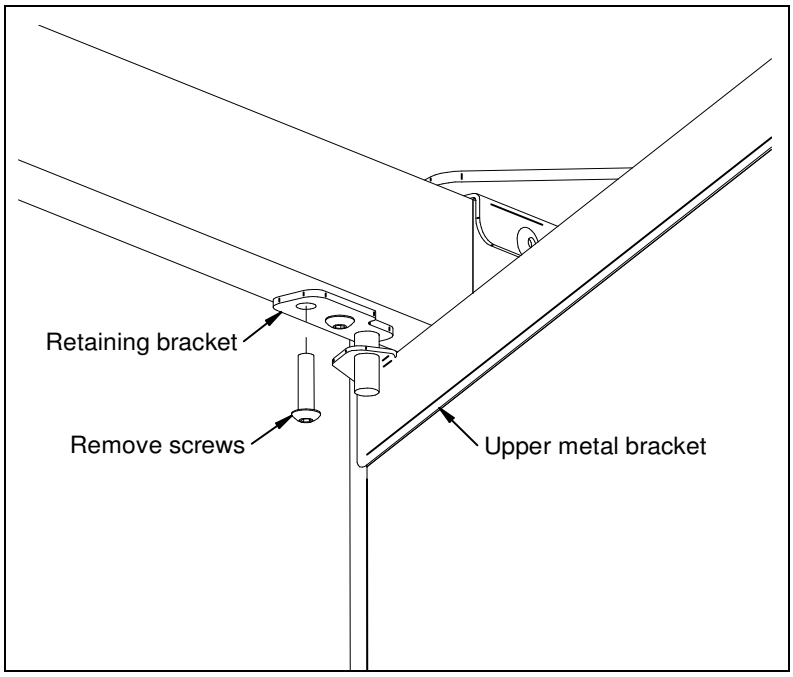

Fig 5

Light bulb replacement

Ensure that the unit is isolated from the mains.

Carefully remove the glass cover using a flat bladed screwdriver. Remove the bulb. Fit new bulb and replace cover.

Shelf racks removal and refitting

Lift the shelf rack upwards to clear the lower locating pins then swing the lower edge away from the oven side panel and lower the shelf from the upper pins.

Refit by locating onto the upper pins first then onto the lower pins.

SPARE PARTS LIST

You can search for your spare parts on Lincat.co.uk using your products serial number.

Part Number	Description	Used on
BU55	Door Bush	CO343M, CO343T
BU227	Oven light bulb	CO343M, CO343T
CA208	Run Capacitor	CO343M, CO343T
CCB02	Control PCB	CO343T
CCB03	Control PCB	CO343M
CDB02	Display PCB	CO343T
EL332	3.0 Kw Element	CO343M, CO343T
FAS250	Knob clip	CO343M
GL712/S	Inner glass	CO133M, CO133T
IMP02	Impellor	CO343M, CO343T
KN526	Control Knob	CO343M
KN527	120 minute timer knob	CO343M
LE85	Adjustable Leg	CO343M, CO343T
MO31	Bi-Directional Motor	CO343M, CO343T
NE46	Green neon	CO343M
NE47	Amber neon	CO343M
PL306	Plug and lead	CO343M, CO343T
SE97	Door seal	CO343M, CO343T
SH109	Shelf	CO343M, CO343T
SW34	Fan speed switch	CO343M
SW97	On/Off switch	CO343M
TC47	Thermocouple	CO343T
TH46	Thermostat	CO343M
TH203	Safety Cut out	CO343M, CO343T
TI56	120 minute timer	CO343M
X54900	Door switch	CO343M, CO343T

ACCESSORIES

Part Number	Description		Used on
CO300/FS	Floor stand 4 runners	1/1 GN	CO343M, CO343T
CO300/LFSK	Low floor stand	1/1 GN	CO343M, CO343T

SERVICE INFORMATION

For help with the installation, maintenance and use of your **Lincat** equipment, please contact our service department:

☎ UK: 01522 875520

For non-UK customers, please contact your local Lincat dealer

All service work, other than routine cleaning should be carried out by one of our authorised service agents. We cannot accept responsibility for work carried out by other persons.

To ensure your service enquiry is handled as efficiently as possible, please tell us:

- Brief details of the problem
- Product code
- Type number
- Serial number

} All available on serial plate

Lincat reserve the right to carry out any work under warranty, given reasonable access to the appliance, during normal working hours, Monday to Friday, 08:30 to 17:00.

GUARANTEE

This unit carries a comprehensive UK mainland 2 year warranty. The guarantee is in addition to, and does not diminish your statutory or legal rights.

The guarantee does not cover:

- Accidental damage, misuse or use not in accordance with the manufacturer's instructions
- Consumable items (such as filters, glass, bulbs, slot toaster elements and door seals.)
- Damage due to incorrect installation, modification, unauthorised service work or damage due to scale, food debris build-up, etc.

The manufacturer disclaims any liability for incidental, or consequential damages.

Attendance is based on reasonable access to the appliance to allow the authorised technician to carry out the warranty work.

Service calls to equipment under warranty will be carried out in accordance with the conditions of sale. Unless otherwise specified, a maximum of 15 minutes of administrative time, not spent directly carrying out servicing work, is provided for within the warranty. Any requirement for staff attending the call to spend greater timethan 15 minutes due to administrative requirements, such as on health and safety risk assessments, will be chargeable at the prevailing rate.