User Manual
Of Refrigerator

BX01(US)/BX02(US)
BX01(EU)/BX02(EU)

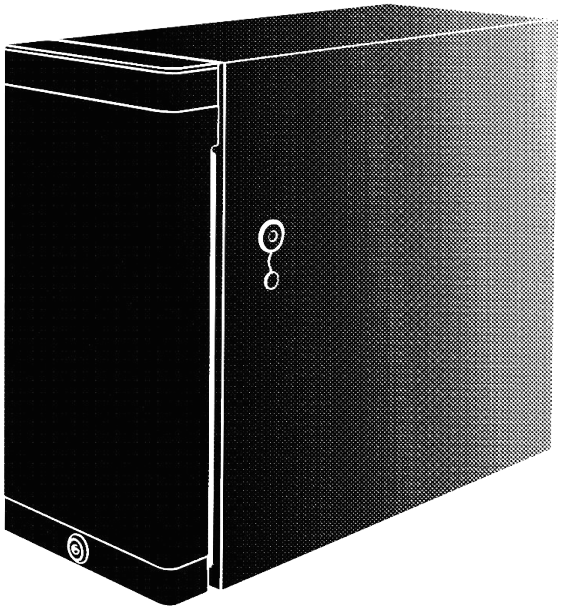

Safety notice

⚠ **Notices!**

- This refrigerator is an electrical product and must strictly comply with safety matters to avoid accidents.
- Please read this manual carefully before using the product as it points out important matters for preventing accidents and how to use the product.
- After reading, please keep it well for future reference.
- If there is any change in the color or accessory configuration of the product, please refer to the actual purchase.
- Products are subject to change without notice!
- The company has the final interpretation right!

⚠ **Warning!**

- The power cord adopts Y-shaped connection. If the supply cord is damaged, it must be replaced by the manufacturer, its service agent or similarly qualified persons in order to avoid a hazard.
- Do not use the refrigerator on a carpet or other similar flammable surface.
- Do not store explosive substances such as aerosol cans with a flammable propellant in this appliance.
- After the refrigerator is opened, the air inlet and outlet must be unshielded and covered to ensure good heat dissipation and ventilation.
- When the product is in use, do not cover clothing, curtains, bedding, paper, etc. on the product
- Please do not place any water holding utensils or pour water on the top of the refrigerator.
- Do not place the refrigerator in a humid environment, such as a laundry room, bathroom, etc.

- Use a well-grounded and fused socket.
- When not using or cleaning, please pull out the power plug first, and do not insert or pull out the power plug with wet hands.
- When cleaning the refrigerator, use water and neutral detergent to clean the outer surface of the product. After cleaning, use a dry wipe to wipe off the remaining water on the surface.
- Do not rinse the refrigerator using water directly.
- Do not clean the refrigerator with hot water, gasoline, acid detergent, stupid or hydrochloric acid.
- Pay special attention to the frequent maintenance of the door seam tape, which is not easy to damage.
- After cleaning, allow enough time for the wiped parts to dry, especially to ensure that the power cord plug is completely dry before inserting the power cord into the socket.
- If the refrigerator is not used for a long time, unplug it.
- If this product has an unrecoverable failure, do not use it.
- This product is an appliance that uses combustible and heat-insulating cyclopentane/polystyrene material. Do not discard this electronic product as garbage at random. Please use separate recycling facilities.
- The appliance is not to be used by persons (including children) with reduced physical, sensory or mental capabilities, or lack of experience and knowledge, unless they have been given supervision or instruction.
- Children being supervised not to play with the appliance.

WARNING:When positioning the appliance,ensure the supply cord is not trapped or damaged.

WARNING:Do not locate multiple portable socket-outlets or portable power supplies at the rear of the appliance.

Packing list

Refrigerator	1 PCS
User manual	1 PCS

Product Overview

Technical parameter

Product Name	Refrigerator			
Model number	BX01 (US)	BX01 (EU)	BX02 (US)	BX02 (EU)
Net weight	11.2kg		10.7kg	
Gross weigh	13.3kg		12.5kg	
Rated power	130W	130W	130W	130W
Rated voltage (AC)	120V	220V	120V	220V
Effective volume	9.8L		9.8L	
Temperature control range	2-18°C		2-18°C	
Packing size	560*280*513mm		560*280*438mm	

Product Overview/Features

- This product is an electronic refrigerator, using semiconductor thermoelectric cooling, no refrigerant, small size, light weight, reliable operation and easy operation.
- All components of the product are made of environmentally friendly materials, and no refrigerant is required, which meets environmental safety requirements.
- The temperature control range of this product is: 2℃-18℃. It has the function of setting parameters for continuous electricity recording. When the power is turned off, the power is turned on again. The default setting temperature is 5℃.

instructions

1、This appliance is intended to be used in household and similar applications, such as:

—— Kitchen areas in shops, offices or other workplaces
—— Customers on farms, hotels, car hotels and residential environments;
—— Family hotel environment;
—— Catering industry and similar non-retail applications

2、Preparatory work

- Unpack, remove the product, put the product on a table with sufficient space, ensure that there is a space of ≥ 20CM behind the product, and ensure that the product inlet and exhaust vents are not blocked or covered.
- The power input socket needs to be well grounded and has a fuse socket. After checking that the power cord is plugged into the power socket, make sure that the power cord is not blocked or pinched.

3、Startup and operation instructions

Remove the door key from the accessory bag, insert it into the lock hole, rotate it clock-wise by 90°, and then open the door.

Please refer to the following illustration for details

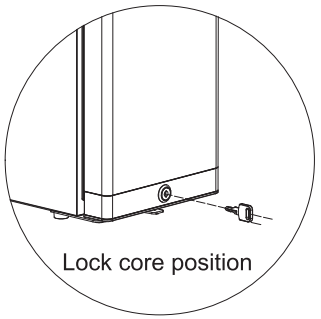

Step 1

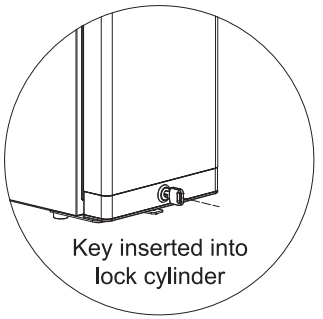

Step 2

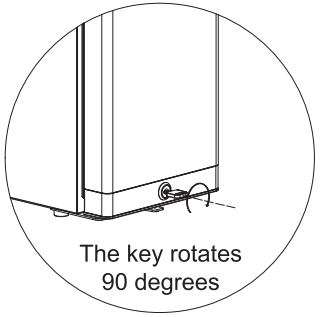

Step 3

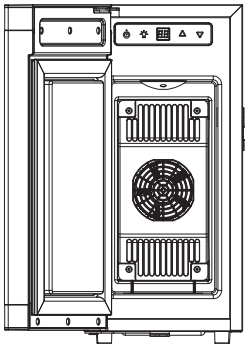

Step 4

4、Operation Instructions

Open the refrigerator door, the control panel is above the storage bin, the specific functions and methods of use are shown in the figure below:

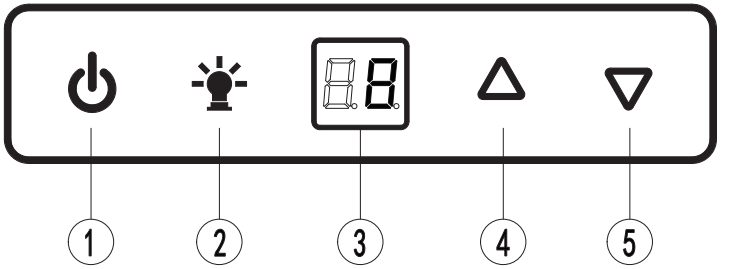

1. Power button, press this button once to turn on the power, the refrigerator cooling function is turned on, the digital tube displays the current ambient temperature, and the default setting is 5 ℃. Press this key twice to turn off the refrigerator and stop cooling.
2. Storage compartment lighting, press once to turn on the lighting, press twice to turn off the lighting.
3. The digital tube function status display shows the ambient temperature and the preset cooling temperature.
4. Temperature setting increment button, increment in the range of 2℃ to 18℃.
5. Temperature setting decreasing button, decreasing in the range of 18℃ to 2℃.

5、Illustration of key component names

The key components of the product are shown as below:

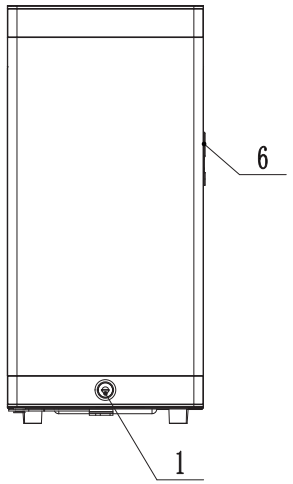

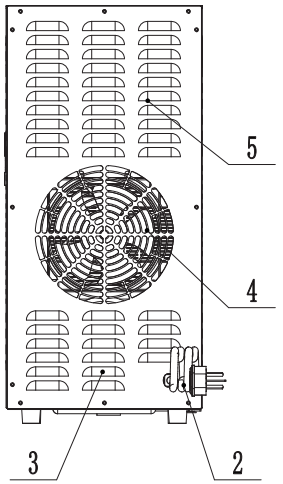

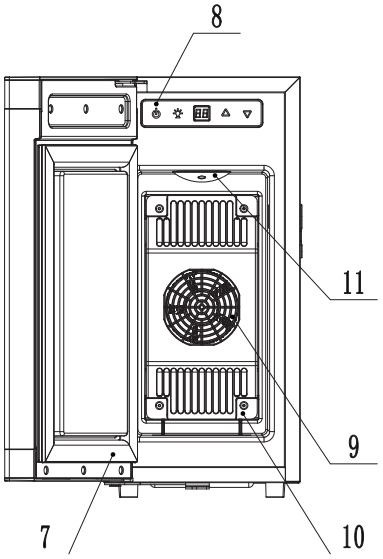

1.Door Lock	7.Seal door stopper
2.Power cord	8.Control panel
3.Air outlet	9.Cold-end Fan
4.Air inlet	10.Refrigeration module cover
5.Air outlet	11.Warehouse light
6.Pipe hole plug	

Product Size:

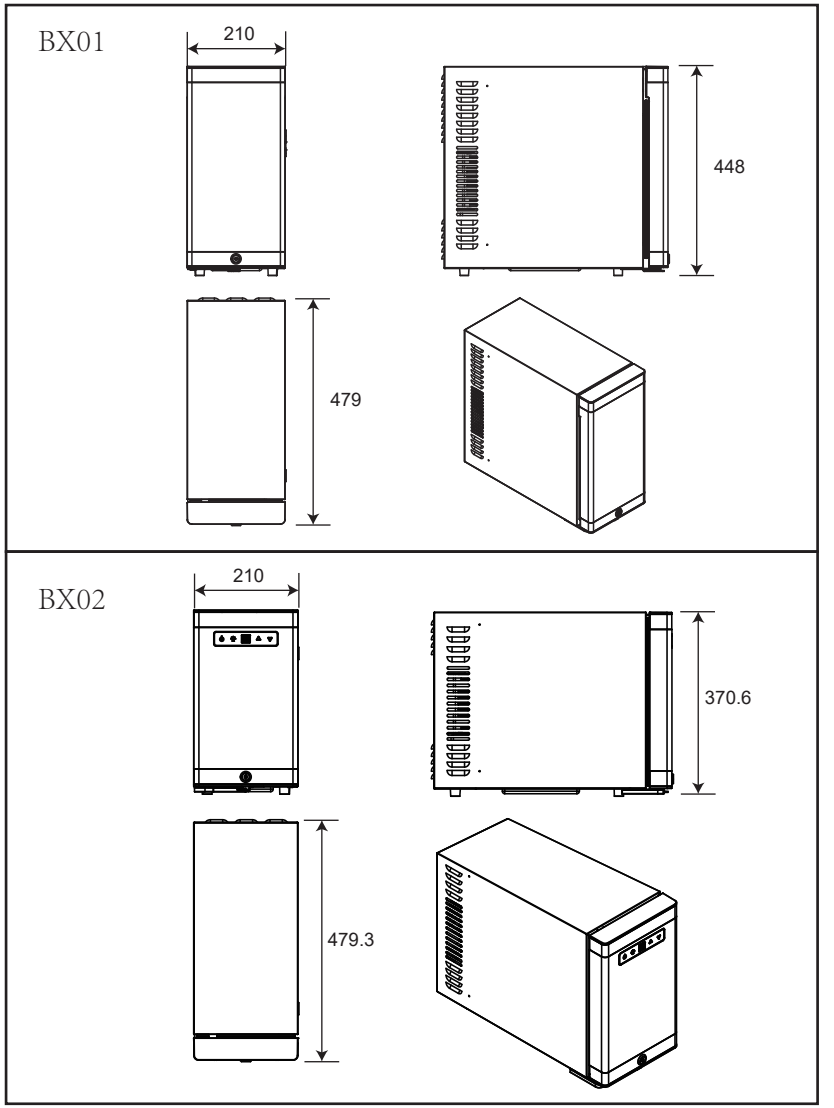

Repair and maintenance

1.The product power cannot be turned on normally.

- Check whether the power input socket and power plug are loose, and determine whether the product is powered on.

2.The product cannot be cooled.

- Check whether the cooling temperature has reached the set temperature, if it reaches the set temperature, it will stop cooling.
- The refrigerated room lighting is LED, which cannot be replaced by users, and it needs to be replaced by professionals.